McHale

Fusion 3 PLUS

QUALITY
I.S. EN ISO 9001:2015
NSAI Certified

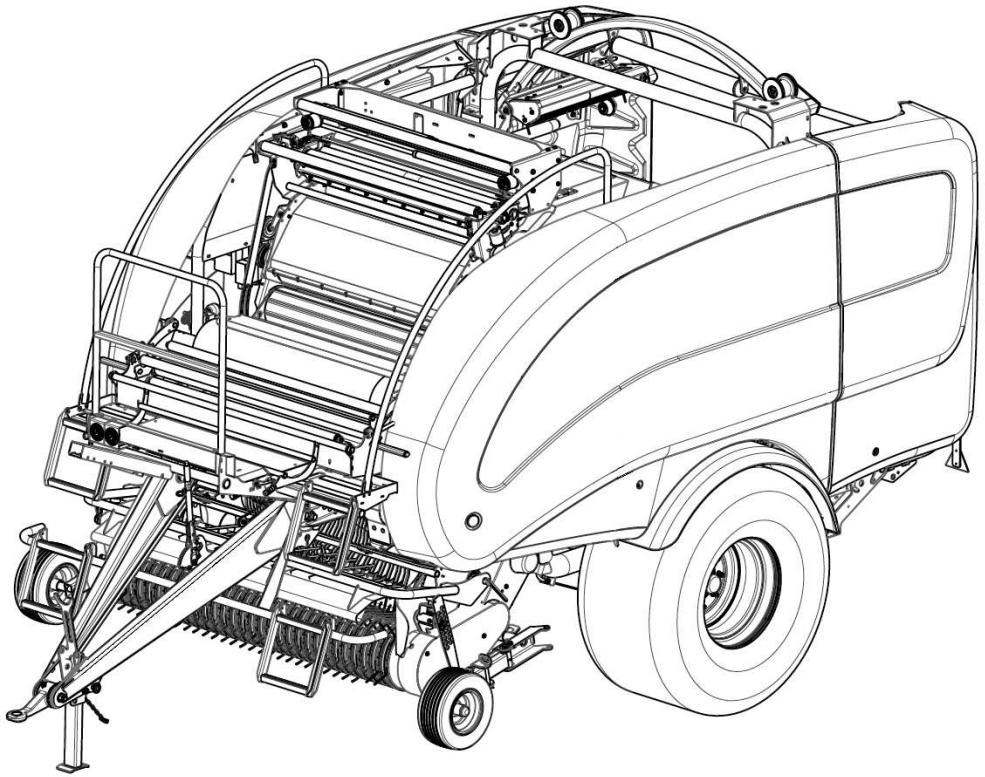

FUSION 3 PLUS

Spare Parts Book

McHale,
Ballinrobe,
Co. Mayo, Ireland.

Tel: +353 94 9520300
Fax: +353 94 9520356
Email: sales@mchale.net
Website: www.mchale.net

This page is intentionally left blank

Introduction

The ***McHale*** **FUSION 3 PLUS** which you have purchased has been developed through years of constant research and development. Given proper care and attention the **FUSION 3 PLUS** will give years of reliable and dependable performance. However it is important that the operators manual is read and fully understood to achieve this, **before** the machine is operated. As part of this philosophy it is vital to use only **genuine** ***McHale*** replacement parts, as these are manufactured to the same high standard as the original machine. These may be obtained through your ***McHale*** dealer.

If any part of this manual is not fully understood, please contact your ***McHale*** dealer who will be able to answer any questions or queries that you might have. It is important to quote the machine serial number when requiring spare parts or technical assistance. Space is provided below to record the machine details:

Serial number:	
Year of manufacture:	
Date of delivery:	

If you require further copies of this spare parts manual please
quote part number CLT00546

Note: Parts described as left and right are done so according to the direction that the machine normally travels in.

Note: Due to a policy of continuous product development and improvement *McHale Engineering* reserve the right to alter machine specifications without prior notice.

Contents

Section	Page	Document
Pick-up unit		
Pick-up reel shaft (805)	6	SPD00805
Pick-up reel shaft flex [Camless] (977)	8	SPD00977
Pick-up reel chassis (804)	10	SPD00804
Pick-up reel chassis flex [Camless] (978)	12	SPD00978
Pick-up 3 (824)	14	SPD00824
Pick-up 4 (896)	16	SPD00896
Pick-up 5 (897)	18	SPD00897
Pick-up drop floor [Up to Serial No 662199 (Fusion) 710485 (F5)] (393)	20	SPD00393
Pick-up drop floor suspension (971)	22	SPD00971
Pick-up drop floor select (803)	24	SPD00803
Pick-up drop floor suspension select (976)	26	SPD00976
Crop roller [On Fusion-F5-V6 from Serial No 655681-706661-800616] (775)	28	SPD00775
Crop roller [Camless] (966)	30	SPD00966
PTO shaft & Gearbox		
PTO shaft [PWE580]	32	SPD00699
Gearbox 1 (831)	34	SPD00831
Gearbox 2 (490)	36	SPD00490
Chassis		
Drawbar (952)	38	SPD00952
Screw jack & Handbrake (812)	40	SPD00812
Steps & platform (806)	42	SPD00806
Chassis [Up to Serial No 662265] (808)	44	SPD00808
Chassis [From Serial No 662266] (979)	46	SPD00979
Axle Hyd-brake (941)	48	SPD00941
Axle Air-brake (942)	50	SPD00942
Air brake kit (818)	52	SPD00818
Wheels & Mudguards (813)	54	SPD00813
Chains & Belts (943)	56	SPD00943
Panels LH (807)	58	SPD00807
Panels RH (833)	60	SPD00833
Bale chamber		
Front chamber [Idle side] (506)	62	SPD00506
Front chamber [Drive side] (507)	64	SPD00507
Bottom chamber door [Idle side] (503)	66	SPD00503
Bottom chamber door [Drive side] 1 (504)	68	SPD00504
Bottom chamber door [Drive side] 2 (505)	70	SPD00505
Top chamber door NRF [Idle side] (830)	72	SPD00830
Top chamber door [Drive side] (509)	74	SPD00509
Rollers (510)	76	SPD00510
Roller locations (513)	78	SPD00513
Bearings (517)	80	SPD00517
NRF Netter unit		
NRF Netter unit 1 [Up to Serial No 659743] (827)	82	SPD00827
NRF Netter unit 1 [From Serial No 659744] (973)	84	SPD00973
NRF Netter unit 2 [Up to Serial No 657406] (828)	86	SPD00828
NRF Netter unit 2 [from Serial No 657407] (893)	88	SPD00893
Film gathering unit (826)	90	SPD00826
Film stretch unit (825)	92	SPD00825
Wrapping		
Transfer & front wrapping rollers (1000)	94	SPD01000
Rear wrapping cradle (954)	96	SPD00954
Dispenser ring (980)	98	SPD00980
Dispenser ring brake (981)	100	SPD00981
Dispenser 1 (529)	102	SPD00529

Section	Page	Document
Dispenser 2 (530)	104	SPD00530
Cut & Hold LH (814)	106	SPD00814
Cut & Hold RH (532)	108	SPD00532
Side tip [Up to Serial No 657660] (557)	110	SPD00557
Side tip [On Fusion 3 from Serial No 657661] (894)	112	SPD00894
Hydraulic & Electrical		
Hydraulic layout Fusion 3 Plus [Up to Serial No 659743] (835)	114	SPD00835
Hydraulic layout Fusion 3 Plus [From Serial No 659744] (975)	116	SPD00975
Hydraulic valve main control CVA00406 (937)	118	SPD00937
Hyd valve knives & floor [On Fusion from S-No 654556 & F560 from S-No 705595] (702)	120	SPD00702
Hydraulic valve knives & floor [Selectable] CVA00345 (701)	122	SPD00701
Hydraulic valve rotation & tip CVA00157 [On Fusion 3 Plus up to Serial No 659743] (543)	124	SPD00543
Hydraulic valve rotation & tip [From Serial No 659744/900118 Fusion 3 Plus/Vario] (970)	126	SPD00970
Hydraulic valve chamber door CVA00239 [Used on Fusion 3 Plus up to Serial No 659743] (822)	128	SPD00822
Hydraulic valve chamber door CVA00428 [Used on Fusion 3 Plus from Serial No 659744] (974)	130	SPD00974
Hydraulic rams chamber door (884)	132	SPD00884
Hydraulic rams pick-up reel CRA00186 (182)	134	SPD00182
Hydraulic rams cut & hold CRA00074 (549)	136	SPD00549
Hydraulic rams bale tip cradle CRA00558 (551)	138	SPD00551
Oil & Grease systems 1 (552)	140	SPD00552
Oil & Grease fittings (553)	142	SPD00553
Oil & Grease systems 3 (554)	144	SPD00554
Oil & Grease systems 4 (555)	146	SPD00555
Oil & Grease systems 5 (556)	148	SPD00556
Electrical control [Up to Serial No 659743] (918)	150	SPD00918
Electrical control [From Serial No 659744] (968)	152	SPD00968
Isocan control unit (1078)	154	SPD01078
Camera & monitor kit (1079)	156	SPD01079
Electrical lighting kit [On Fusion 3 up to S No 659431 & Fusion Vario up to S No 900095] (816)	158	SPD00816
Electrical lighting kit [On Fusion 3 from S-No 659432 & Fusion Vario from S-No 900096] (950)	160	SPD00950
Decals		
Decals 1 (819)	162	SPD00819
Decals 2 (834)	164	SPD00834
Decals 3 (821)	166	SPD00821

Pick-up reel shaft (805)

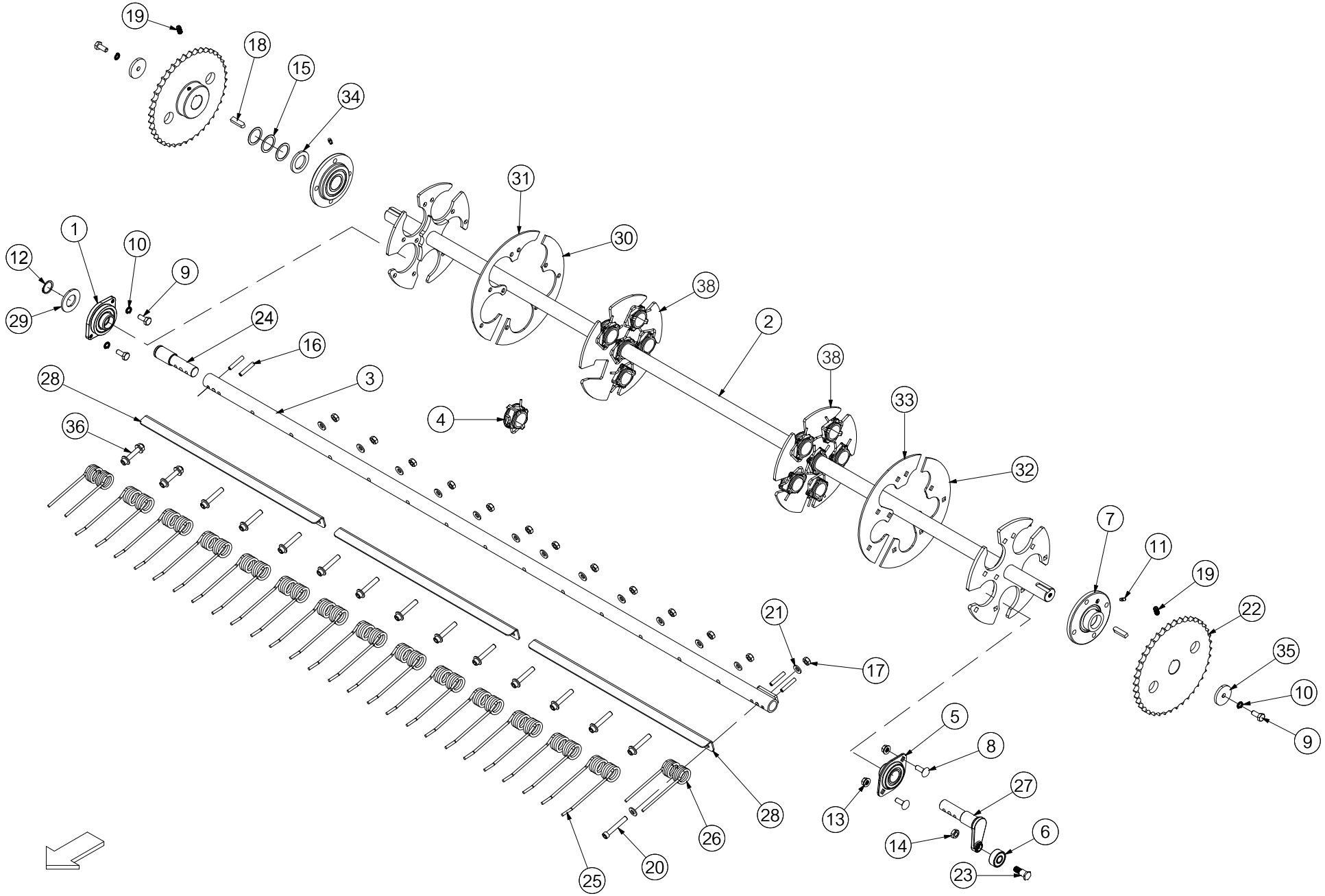

No.	Part No	Description	Qty
1	ACH02226	REEL BEARING FLOATING ASSY	5
2	ACN00046	PICK UP REEL SHAFT ASSY 5 BAR *5 TINE BAR REEL (SHOWN)*	1
2	ACH00309	PICK UP REEL SHAFT ASSY 4 TINE *USED ON 4 TINE BAR REEL ONLY*	1
3	ALA00046	TINE BAR ASSY REEL	5
4	ALA00177	BUSHING CENTER (ASSY) REEL	12
5	CBR00072	BEARING INA 2 BOLT RAE 30 NPPB	5
6	CBR00081	BEARING CAM INA LR 5202 NPPU	5
7	CBR00092	BEARING CIRCR FLNGE INA PME 35	2
8	CFA00017	SETSCREW M10X30 CUP SQ Z/P	10
9	CFA00024	SETSCREW M10X25 Z/P	12
10	CFA00137	WASHER SPRING 10MM H.D Z/P	12
11	CFA00217	GREASE NIPPLE M6X1.0 ST	2
12	CFA00402	CIRCLIP 30MM EXTERNAL	5
13	CFA00443	NUT M10 SERRATED FLANGE (DIN 6923)	10
14	CFA00446	NUT M12 HEXAGON LOCK/HALF NUT	5
15	CFA00512	SHIM 35X45X1.0 Z/P	3
16	CFA00538	SPIROL PIN 8X45 S/C	20
17	CFA00541	NUT M10 BRINKS SELF LOCKING	5
18	CFA00624	KEY 10x8x40 STRAIGHT	2
19	CFA00625	M10 x 20 GRUBSCREW	2
20	CFA00725	BOLT M10X65 SOC CAP	5
21	CFA02244	TINE BOLT WASER FOR P/U REEL	10
22	CMH00621	PLATWEHEEL 3/4" PITCH 40 T	2
23	CMH00672	BOLT SHOULDER 3/4" H	5
24	CMH00843	SHAFT 30X125 STEPPED & C-HOLES	5
25	CTN00008	TINE PICK UP REEL BA	65
26	CTN00014	TINE STRAIGHT PICK UP REEL	10
27	CTP00251	CAM AXLE (FORGED)	5
28	CZC02139	3MM L PU TINE BAR ANGLE 8 HOLE *USED ALONG WITH CZC02140 UP TO SERIAL No 709517 (F5), 802178 (V6)*	5
28	CZC02140	3MM L PU TINE BAR ANGLE 7 HOLE *USED ALONG WITH CZC02139 UP TO SERIAL No 709517 (F5), 802178 (V6)*	5
28	CZC04325	3MM L PU TINE BAR ANGLE 5 HOLE *USED FROM SERIAL No 709518 (F5), 802179 (V6)*	15
29	CZD02325	4MM L WASHER 30X58X4 Z/P	5
30	CZD04424	4MM L GRASS GUARD 5 TINE BAR REEL	1
31	CZD04425	GRASS GUARD 5 TINE BAR REEL *USED ON 5 TINE BAR REEL ONLY (SHOWN)*	1
31	CZD02285	4MM L REEL GRASS PLATE 4 TINE *USED ON 4 TINE BAR REEL ONLY*	4
32	CZD04701	4MM L REEL SHAFT BOLT ON END PLATE	1
33	CZD04702	4MM L REEL SHAFT BOLT ON END PLATE	1
34	CZE00156	5MM L WASHER 35X55X5 Z/P	1
35	CZF02215	6MM L WASHER 10.5X50X6 Z/P	2
36	KST00058	KIT BOLTS FOR PICKUP TINES X10 *INCLUDES BOLTS, NUTS & WASHERS (SOLD IN MULTIPLES OF 10)*	7
38	APU00005	5 TINE CENTER DISK REPAIR KIT *(INCLUDES ITEM 4) QTY WAS 1x PRIOR TO SERIAL No 709518 (F5), 802179 (V6)*	2

No.	Part No	Description	Qty

Pick-up reel shaft flex [Camless] (977)

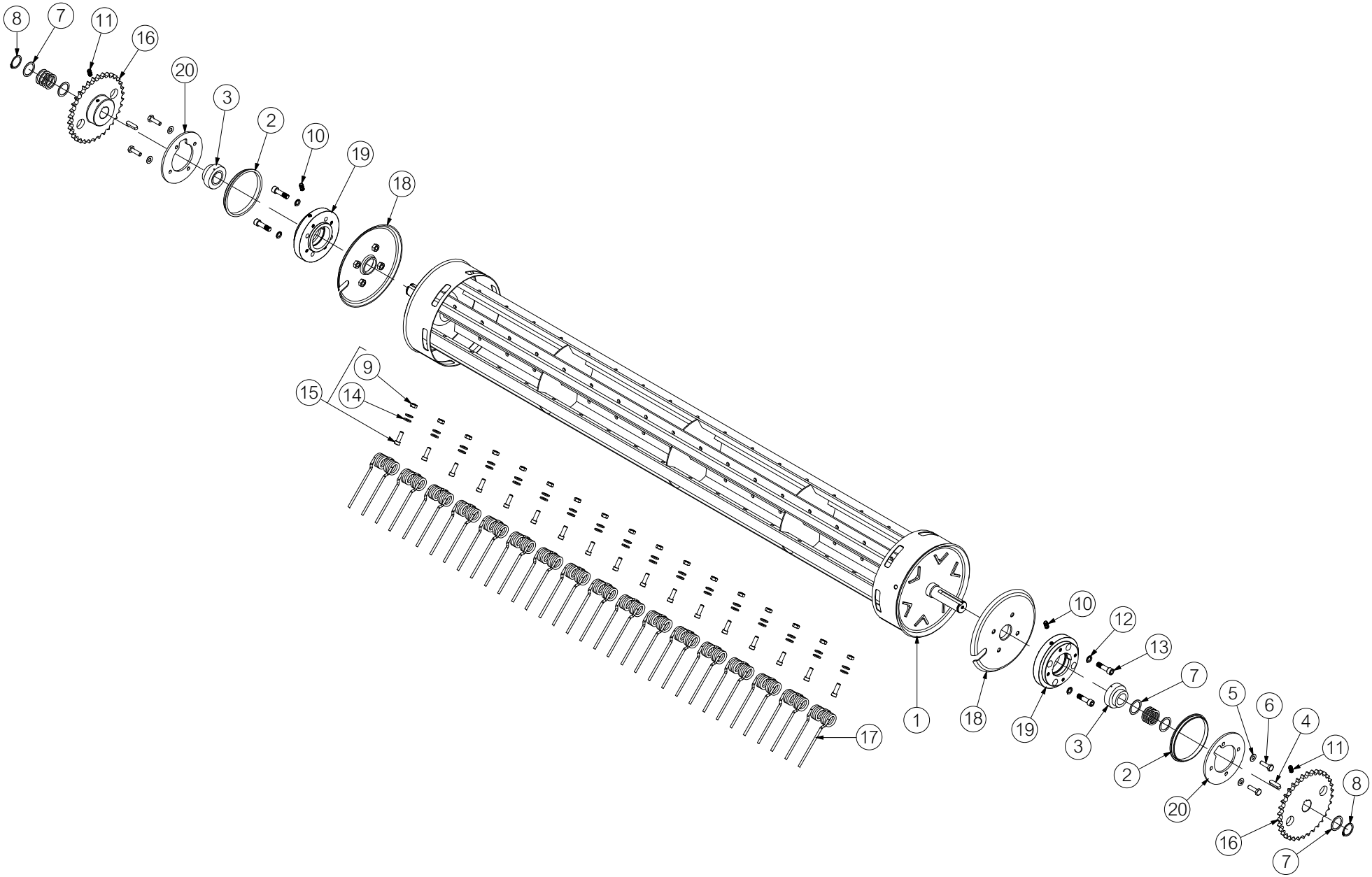

No.	Part No	Description	Qty
1	KST00099	CAMLESS REEL DRUM RETROFIT KIT *UP TO SERIAL No 664795 (FUSION 3), 712937 (F5), 805675 (V6) & 900611 (VARIO)*	1
1	APU00010	CAMLESS REEL ROTOR WELD ASSEM *FROM SERIAL No 664796 (FUSION 3), 712938 (F5), 805676 (V6) & 900612 (VARIO)*	1
2	CBR00327	135MM FLANGE BEARING (GFM 135140-10.5)	2
3	CBR00328	35MM SPHERICAL BEARING GRAE 35 NPPB *UP TO SERIAL No 664795 (FUSION 3), 712937 (F5), 805675 (V6) & 900611 (VARIO)*	2
3	CBR00361	40MM SPHERICAL BEARING GRAE 40 NPPB *FROM SERIAL No 664796 (FUSION 3), 712938 (F5), 805676 (V6) & 900612 (VARIO)*	2
4	CFA00046	KEY 10X8X35 *REPLACES CFA00239 (KEY 10X8X40)*	2
5	CFA00251	WASHER SKM10	8
6	CFA00311	SETSCREW M10X35 Z/P	8
7	CFA00512	SHIM 35X45X1.0 Z/P *UP TO SERIAL No 664795 (FUSION 3), 712937 (F5), 805675 (V6) & 900611 (VARIO)*	14
7	CFA00265	SHIM 40X50X1.0 *FROM SERIAL No 664796 (FUSION 3), 712938 (F5), 805676 (V6) & 900612 (VARIO)*	14
8	CFA00514	CIRCLIP 35MM EXTERNAL DIN 471 *UP TO SERIAL No 664795 (FUSION 3), 712937 (F5), 805675 (V6) & 900611 (VARIO)*	2
8	CFA00551	CIRCLIP 40MM EXTERNAL DIN 471 *FROM SERIAL No 664796 (FUSION 3), 712938 (F5), 805676 (V6) & 900612 (VARIO)*	2
9	CFA00541	NUT M10 BRINKS SELF LOCKING *PART OF KIT (ITEM 15)*	102
10	CFA00550	ROTOR BEARING GREASE FITTING 6MM X 1/8" M/M	2
11	CFA00625	M10 x 20 GRUBSCREW	2
12	CFA00799	WASHER M12 NORDLOC	8
13	CFA01095	BOLT M12X45 SOC CAP ZP 10.9	8
14	CFA02244	TINE BOLT WASER FOR P/U REEL *PART OF KIT (ITEM 15)*	204
15	KST00065	TINE BOLT KIT SOC CAP (M10X30) *INCLUDES NUTS & WASHERS (ITEMS 9 & 14) SOLD IN MULTIPLES OF 10*	11
16	CMH01122	PLATEWEHEEL 3/4 PITCH 34T (35MM BORE) *UP TO SERIAL No 664795 (FUSION 3), 712937 (F5), 805675 (V6) & 900611 (VARIO)*	2
16	CMH01908	PLATEWEHEEL 3/4 PITCH 34 T (40MM BORE) *FROM SERIAL No 664796 (FUSION 3), 712938 (F5), 805676 (V6) & 900612 (VARIO)*	2
17	CTN00025	TYNE CAMLESS REEL	102
18	CTP00467	CAMLESS REEL GRASS CENTER DISK	2
19	CTP00490	FLEX CAMLESS PIVOT BUSH (35MM BRG) *UP TO SERIAL No 664795 (FUSION 3), 712937 (F5), 805675 (V6) & 900611 (VARIO)*	2
19	CTP00609	CAMLESS PIVOT BUSH (40MM BEARING) *FROM SERIAL No 664796 (FUSION 3), 712938 (F5), 805676 (V6) & 900612 (VARIO)*	2
20	CZF07489	6MM L COVER PLATE FLEXI CAMLESS	2

No.	Part No	Description	Qty

Pick-up reel chassis (804)

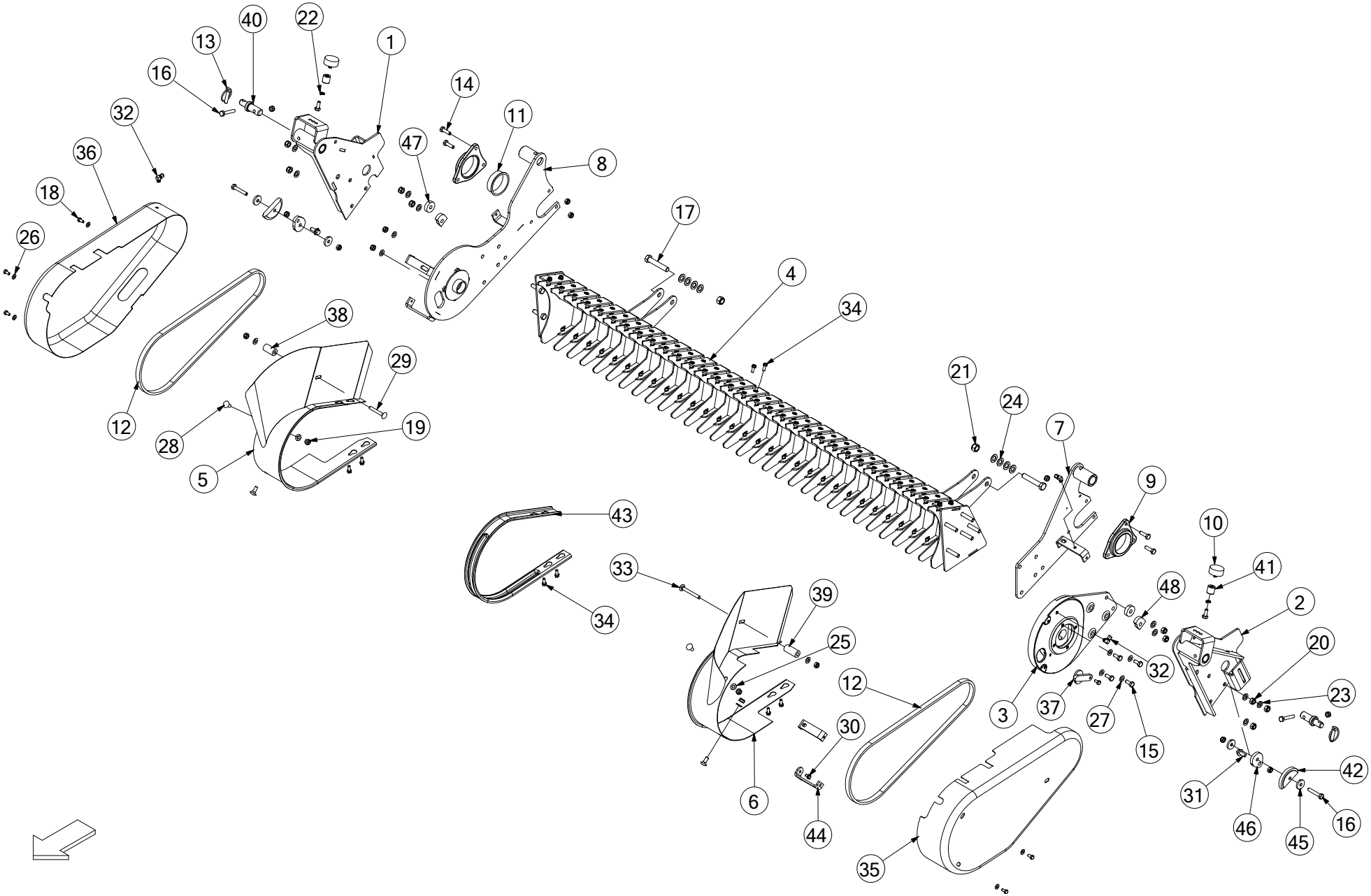

No.	Part No	Description	Qty
1	ACH00298	REEL WELD ASSY OUTER (RIGHT)	1
2	ACH00301	REEL WELD ASSY OUTER (LEFT)	1
3	ACH00308	CAM TRACK ASSY	1
INCLUDES ITEMS 15, 27, 30, 44 & CTP00252			
3	CTP00252	CAM TRACK CAST	1
3	ACH00354	CAM TRACK (DUTCH)	1
FOR DUTCH MACHINES ONLY			
4	ACH01004	REEL BACK PLATE WELD ASSY	1
5	ACH02315	OUTER BAND RHS	1
6	ACH02316	OUTER BAND LHS	1
7	ACH02351	REEL INNER BRACKET LEFT FUSION II	1
8	ACH02352	REEL INNER BRACKET RIGHT FUSION II	1
9	ALA00314	PICKUP REEL PIVOT BRACKET KIT	1
KIT CONTAINS 2 HOUSINGS & 2 IGUS BEARINGS (ITEM 11)			
10	CBE00182	BUFFER RUBBER 50X21 M10X13	2
11	CBR00274	BEARING IGLIDUR GFM-7680-25	2
12	CCH02026	CHAIN ASA60H 3/4" 78 INC LINK	2
(IF AUGER SPROCKET IS 19T USE AS IS & IF AUGER SPROCKET IS 15T REMOVE 2 LINKS)			
13	CFA00005	LINCH PIN 10MM	2
14	CFA00016	BOLT M10X35	4
15	CFA00024	SETSCREW M10X25 Z/P	6
16	CFA00027	BOLT M10X60 Z/P	4
17	CMH02848	PIN CLEVIS 16X85 + DIA 4 C.HOLE	2
REPLACES M16X90 BOLT CFA00040			
18	CFA00101	SETSCREW M8X16 Z/P	7
19	CFA00123	NUT M10 NYLOC	20
20	CFA00124	NUT M12 NYLOC	10
21	CFA00450	SPLIT PIN 4X36 ZP	2
REPLACES M16 NYLOC NUT CFA00128			
22	CFA00137	WASHER SPRING 10MM H.D Z/P	2
23	CFA00138	WASHER FLAT 12MM Z/P	10
24	CFA00140	WASHER FLAT 16MM Z/P	8
25	CFA00201	WASHER FLAT 10 MM Z/P	6
26	CFA02414	8MM SKB WASHER	6
REPLACES SKM8 WASHER CFA00249			
27	CFA00251	WASHER SKM10	8
28	CFA00442	SETSCREW M10X25 CUP SQ	4
29	CFA00474	BOLT M10X70 CUP SQUARE ZP	1
30	CFA00492	SETSCREW M8X12 FLANGED Z/P	2
31	CFA00520	SETSCREW M10X25 FLD ZP	2
32	CFA00542	OILER FITTING 90 DEG 1/8" BSP	3
FITTING WITH NUT & OLIVE (USED ON FUSION ONLY)			
32	CFA02253	90 DEG. 1/8" 4MM QUICK CONNECTOR	3
PUSH-IN FITTING (USED ON F5 & V6 ONLY)			
33	CFA00546	BOLT M10X85 CUP HEAD SQ Z/P	1
34	CFA00766	SETSCREW M8X20 FLANGED DIN6921 Z/P	130
34a	CFA00764	INSERT THREADED M8 (REEL)	130
REPLACEMENT THREADED INSERTS FOR ITEM 4 (IF THREADING GETS DAMAGED)			
35	CGD00034	GUARD REEL LEFT HAND	1
36	CGD00036	GUARD REEL RIGHT SIDE	1
37	CGD00050	CAM TRACK BLANKING CAP	1

No.	Part No	Description	Qty
38	CMH00740	BUSH 12X25X45	1
39	CMH00741	BUSH 12X25X55	1
40	CMH01035	PIN 25X97 AND12MM CH (Z/P)	2
41	CMH01088	BUSH 10X25X25 THREADED Z/P	2
42	CPL00043	PLASTIC CHAIN TENSIONER (REEL)	2
43	CTP00048	BAND PICK UP REEL (BALER)	29
44	CZF04369	6MM L CAM TRACK BRAC	2
45	CZF05111	6MM L PART SPACER	4
46	CZH02907	10MM L WASHER 10X50 FLAT SIDE ZP	2
47	CZI02045	12MM L WASHER 39.5X12.5X12	2
48	CZI02046	12MM L WASHER DOWEL	2

Pick-up reel chassis flex [Camless] (978)

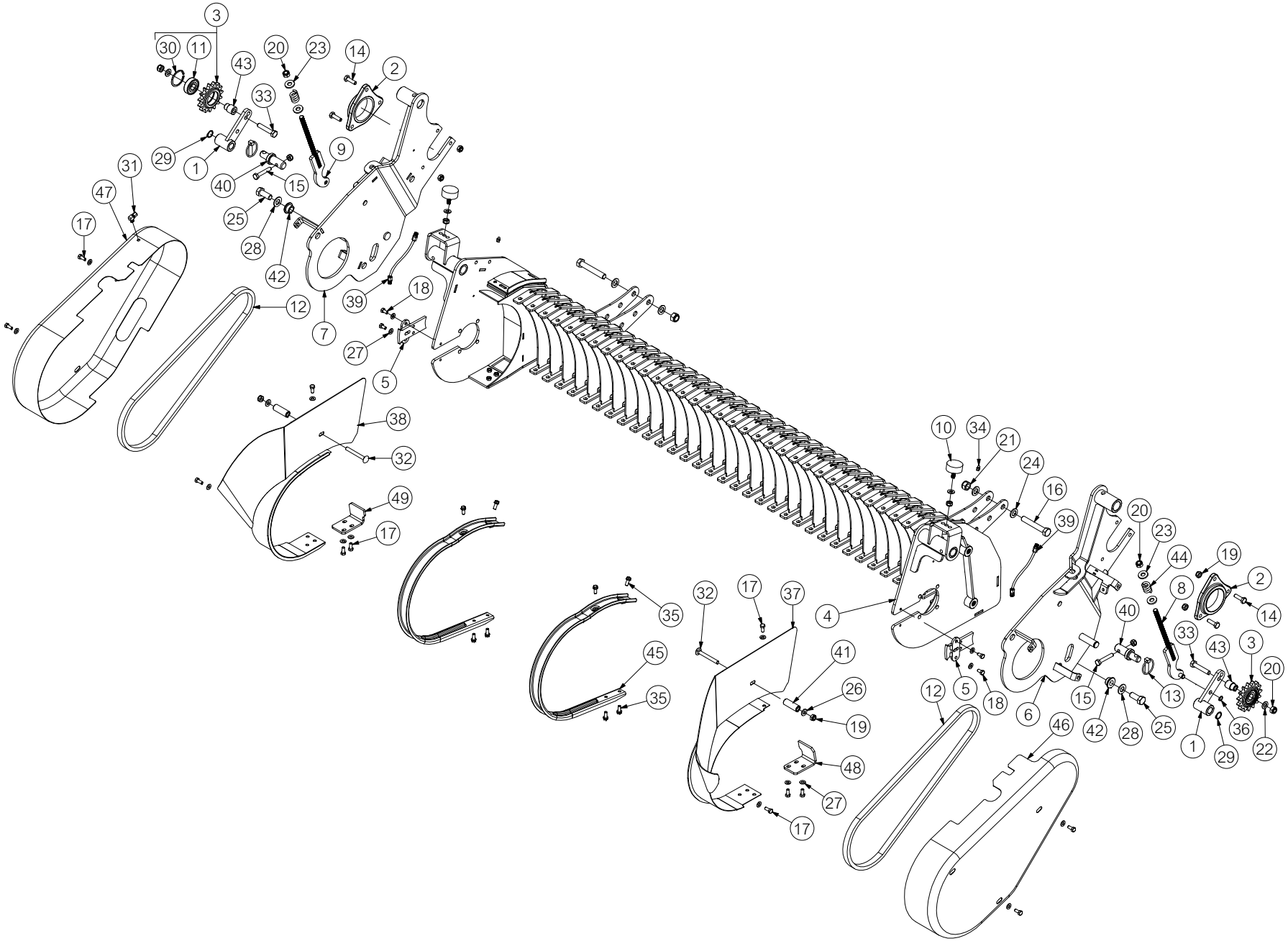

No.	Part No	Description	Qty
1	ACH02939	CHAIN TENSIONER ARM WELD ASSEM (FLEXI)	2
2	ALA00285	REEL PIVOT BRACKET IGIDILUR	2
3	ALA00700	TENSIONER SPROCKET ASSEMBLY V6	2
INCLUDES ITEMS 11 & 30			
4	APU00015	FLEXI CAMLESS REEL BACK WELD ASSEM	1
5	APU00017	SIDE WALL COVER PLATE (FLEXI)	2
6	APU00018	FLEXI SIDE WALL WELD ASSEM (LHS)	1
7	APU00019	FLEXI SIDE WALL WELD ASSEM (RHS)	1
8	APU00020	CHAIN TENSIONER ADJUSTER WELD ASSEM (FLEXI)	1
9	APU00021	CHAIN ADJUSTER WELD ASSEM	1
10	CBE00002	BUFFER RUBBER 50X21 M10X28	2
11	CBR00066	BEARING 6304 2RS	2
12	CCH00195	CHAIN ASA60H 3/4 76 P INC JOINERLINK	2
(IF AUGER SPROCKET IS 19T USE AS IS & IF AUGER SPROCKET IS 15T REMOVE 2 LINKS)			
13	CFA00005	LINCH PIN 10MM	2
14	CFA00016	BOLT M10X35	6
15	CFA00027	BOLT M10X60 Z/P	2
16	CMH02848	PIN CLEVIS 16X85 + DIA 4 C.HOLE	2
REPLACES M16X90 BOLT CFA00040			
17	CFA00052	SETSCREW M8X20 Z/P	16
18	CFA00101	SETSCREW M8X16 Z/P	4
19	CFA00123	NUT M10 NYLOC	12
20	CFA00124	NUT M12 NYLOC	4
21	CFA00450	SPLIT PIN 4X36 ZP	2
REPLACES M16 NYLOC NUT CFA00128			
22	CFA00138	WASHER FLAT 12MM Z/P	2
23	CFA00139	WASHER FLAT 12MM H/D Z/P	4
24	CFA00140	WASHER FLAT 16MM Z/P	4
25	CFA00151	SETSCREW M16X40 Z/P	2
26	CFA00201	WASHER FLAT 10 MM Z/P	4
27	CFA00249	WASHER SKM8	20
28	CFA00252	WASHER SKM16	2
29	CFA00339	CIRCLIP 20MM EXTERNAL	2
30	CFA00461	CIRCLIP 52MM INTERNAL DIN 472	2
31	CFA00542	OILER FITTING 90 DEG 1/8 BSP	1
FITTING WITH NUT & OLIVE (USED ON FUSION ONLY)			
31	CFA02253	90 DEG 1/8 4MM QUICK CONNECTOR	1
PUSH-IN FITTING (USED ON F5 & V6 ONLY)			
32	CFA00546	BOLT M10X85 CUP HEAD SQ Z/P	2
33	CFA00579	BOLT M12X65 ZP	2
34	CFA00590	GREASE NIPPLE 1/8" BSP ST	2
35	CFA00766	SETSCREW M8X20 FLANGED DIN6921 Z/P	132
35a	CFA00764	INSERT THREADED M8 (REEL)	132
REPLACEMENT THREADED INSERTS FOR ITEM 4 (IF THREADING GETS DAMAGED)			
36	CFA01053	CIRCLIP 12MM EXTERNAL Z/P DIN 471	2
37	CGD00375	OUTER GUARD GRASS BAND LHS	1
38	CGD00376	OUTER GUARD GRASS BAND RHS	1
39	CHY01096	6MM FLEXI CAMLESS GREASE PIPE ASSEM	2
40	CMH01035	PIN 25X97 AND12MM CH (Z/P)	2
41	CMH02687	BUSH 20 X 12 X 56	2

No.	Part No	Description	Qty
42	CMH02713	35 X 25 STEPPED BUSH	2
43	CMH02744	BUSH 34 X 25 STEPPED	2
44	CSG00297	SPRING 6 X 25 X 35	2
45	CTP00456	BAND CAMLESS REEL	33
46	CTP00471	FLEXI CAMLESS SIDE GUARD PRESSED (DS)	1
47	CTP00472	FLEXI CAMLESS SIDE GUARD PRESSED (NDS)	1
48	CZF07108	6MM L DRUM CLEANER PLATE	1
49	CZF07109	6MM L DRUM CLEANER PLATE	1

Pick-up 3 (824)

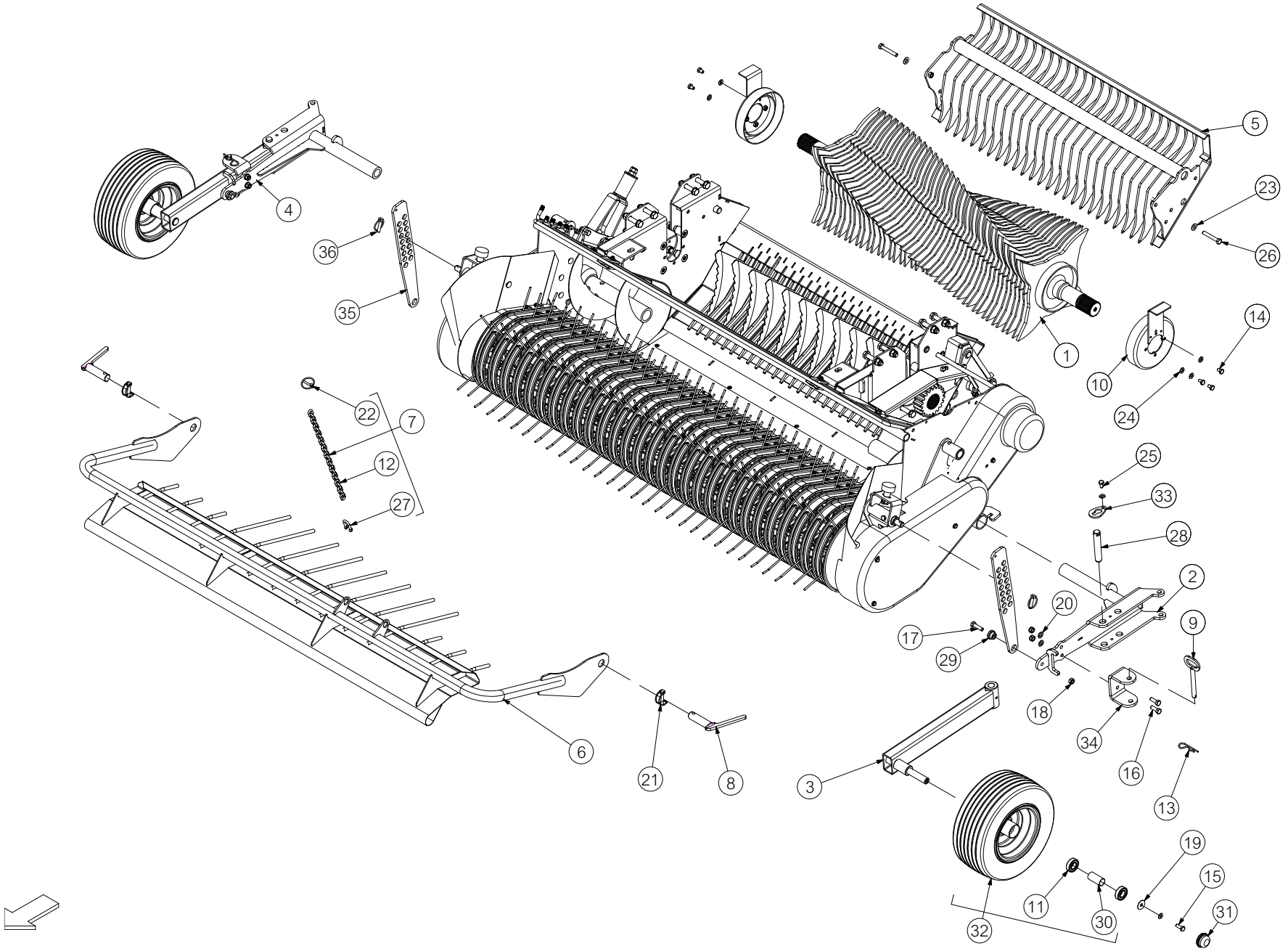
5
23
26
4
36
35
14
1
10
24
22
7
12
27
25
33
28
2
20
9
17
29
18
34
16
6
21
8
3
13
19
15
11
30
31
32

No.	Part No	Description	Qty
1	ACH00317	ROTOR 23 - 25 KNIFE WELD Ø500	1
USED ON FUSION 3 UP TO SERIAL No 662199 (STANDARD FLOOR)			
1a	CZF02684	6MML ROTOR PLATE (23-25 KNIFE)	2
REPLACEMENT (ACH00317) ROTOR FINGER PLATE (NOTE: THERE ARE 2 FINGER PLATES PER FLIGHT)			
1	ACH01448	ROTOR 25 KNIFE WELD ASM Ø540MM	1
USED ON FUSION 3 ON SUSPENSION FLOORS ONLY FROM SERIAL No 662200			
1a	CZF07132	6MM L ROTOR PLATE 540 OD	2
REPLACEMENT (ACH01448) ROTOR FINGER PLATE (NOTE: THERE ARE 2 FINGER PLATES PER FLIGHT)			
1	ACH02958	BIG ROTOR VTYPE 2STAR Ø540HD7K	1
SPECIFIC MARKETS FROM SERIAL No 662700 ONWARDS (SUSPENSION FLOOR)			
1	ACH02933	ROTOR V-TYPE 2-STAR Ø500HD 15K	1
SPECIFIC MARKETS FROM SERIAL No 662278 TO 662699 (STANDARD FLOOR)			
1	ACH01353	ROTOR V-TYPE 2-STAR Ø500 HD 7K	1
SPECIFIC MARKETS FROM SERIAL No 657166 TO 662277 (STANDARD FLOOR)			
1	ACH01089	ROTOR V-TYPE 4-STAR Ø500 15K	1
SPECIFIC MARKETS FROM SERIAL No 654377 TO 657165 (STANDARD FLOOR)			
2	ACH00908	PICKUP WHEEL HINGE WELD ASSY	2
3	ACH00909	PICKUP GUIDE WHEEL WELD ASSY	2
4	ACH00911	PICKUP GUIDE WHEEL COMP ASSY	2
5	ACH01649	COMB 25K FUSION 3 & FUS 3 PLUS	1
USED ON 25K FUSION 3 FROM SERIAL No 659001 & ON ALL FUSION 3 PLUS (NRF) MACHINES (REPLACES ACH01329)			
5a	AGD00086	RUBBER FLAP ASSEMBLY FUSION 3 COMB	1
USED ONLY ON FUSION 3 PLUS COMB FROM SERIAL No 663700 (KIT INCLUDES FLAP, FASTENERS & INSTRUCTIONS)			
5b	CBE00352	BELT FLAP 5X200X275 3 PLY	1
REPLACEMENT BELT FLAP (USED ON FUSION 3 PLUS COMB ONLY)			
5	ACH02712	COMB 25K FUSION 3 STANDARD	1
USED ON STANDARD 25K FUSION 3 FROM SERIAL No 656829 TO 659000			
5	ACH00956	COMB WELD 23 KNIFE FUSION	1
USED ON STD 23K FUSIONS UP TO SERIAL No 656828 (ALSO ORDER KIT REP00044 PRIOR TO SERIAL No 654531)			
5	ACH01525	COMB FUS3 (15K 2STAR HD V ROTOR)	1
FUSION 3 WITH V-TYPE ROTOR IN SPECIFIC MARKETS FROM SERIAL No 662278 ONWARDS			
5	ACH02872	COMB FUS3(7K 2STAR V-TYPE ROTOR)	1
FUSION 3 IN SPECIFIC MARKETS FROM SERIAL No 659001 TO 662277 (REPLACES ACH02807)			
5	ACH02619	COMB ASM (7K 2STAR V-TYPE ROTOR)	1
FUSION 3 IN SPECIFIC MARKETS FROM SERIAL No 657166 TO 659000 (REPLACES ACH02415 & ACH02300)			
5	ACH02415	COMB ASM (15K 4STAR VTYPE ROTOR)	1
FUSION 2 & 3 IN SPECIFIC MARKETS FROM SERIAL No 654377 TO 657165 (USED WITH ACH01089 4-STAR ROTOR)			
6	ACH02331	GRASS GUARD ASSY FUSION	1
7	ACN00065	GRASS GUARD CHAIN ASSY FUSION	1
CHAIN ASM INCLUDES SHACKLE & LINCH-PIN			
8	ALA00035	HINGE PIN REEL FRONT	2
9	ALA00036	PIN WHEEL HINGE ASSY.	2
10	ARC00181	ROTOR SEAL RING ASSY M10 BOLT	2
UP TO SERIAL No 654530			
10	ARC00227	GRASS GUARD 23K ROTOR END SPUN	2
FROM SERIAL No 654531			
10	ARC00182	ROTOR SEAL RING ASM (KOREA) M1	2
KOREAN MACHINES ONLY			
11	CBR00009	BEARING 6205 2RS	4
12	CCH00186	CHAIN CROP ROLLER 7X20X32 LINKS	1
13	CFA00004	R-CLIP 4MM	2
14	CFA00022	SETSCREW M10X16 Z/P	6
15	CFA00031	SETSCREW M12X25 Z/P	2

No.	Part No	Description	Qty
16	CFA00033	SETSCREW M12X35 Z/P	4
17	CFA00079	BOLT M12X45	2
18	CFA00124	NUT M12 NYLOC	6
19	CFA00250	WASHER SKM12	2
19	CFA00718	WASHER MUDWING A13 Z/P	2
19	CFA00720	WASHER FLAT M26 Z/P DIN126	2
20	CFA00138	WASHER FLAT 12MM Z/P	4
21	CFA00194	LINCH PIN PIPE 10MMX50MM	2
22	CFA00202	LINCH PIN 6MM	1
23	CFA00250	WASHER SKM12	4
24	CFA00251	WASHER SKM10	8
25	CFA00293	SETSCREW M10X20 Z/P	2
26	CFA00777	BOLT M12X80 GRADE 10.9 S/C	4
27	CFA00676	D SHACKLE 8MM	1
28	CMH00675	PIN 25 X 140 MILLED FOR CAP Z/P	2
29	CMH00771	BUSH 12X35 STEPPED	2
30	CMH00838	BUSH 27X30.25X62 REEL WHEEL	2
31	CTP00070	DUST CAP 170/60-8 VREDESTEIN	2
32	CWH00037	WHEEL 170/60 -8 (V 64)	2
WHEEL ASM INCLUDES BUSHING & BEARINGS			
33	CZF00293	6MM L CAP SHORT FOR 25MM PINS	2
34	CZH02472	10MM L WHEEL GUIDE PART	2
35	CZH02522	10MM L WHEEL GUIDE P	2
36	CFA00005	LINCH PIN 10MM	2

Pick-up 4 (896)

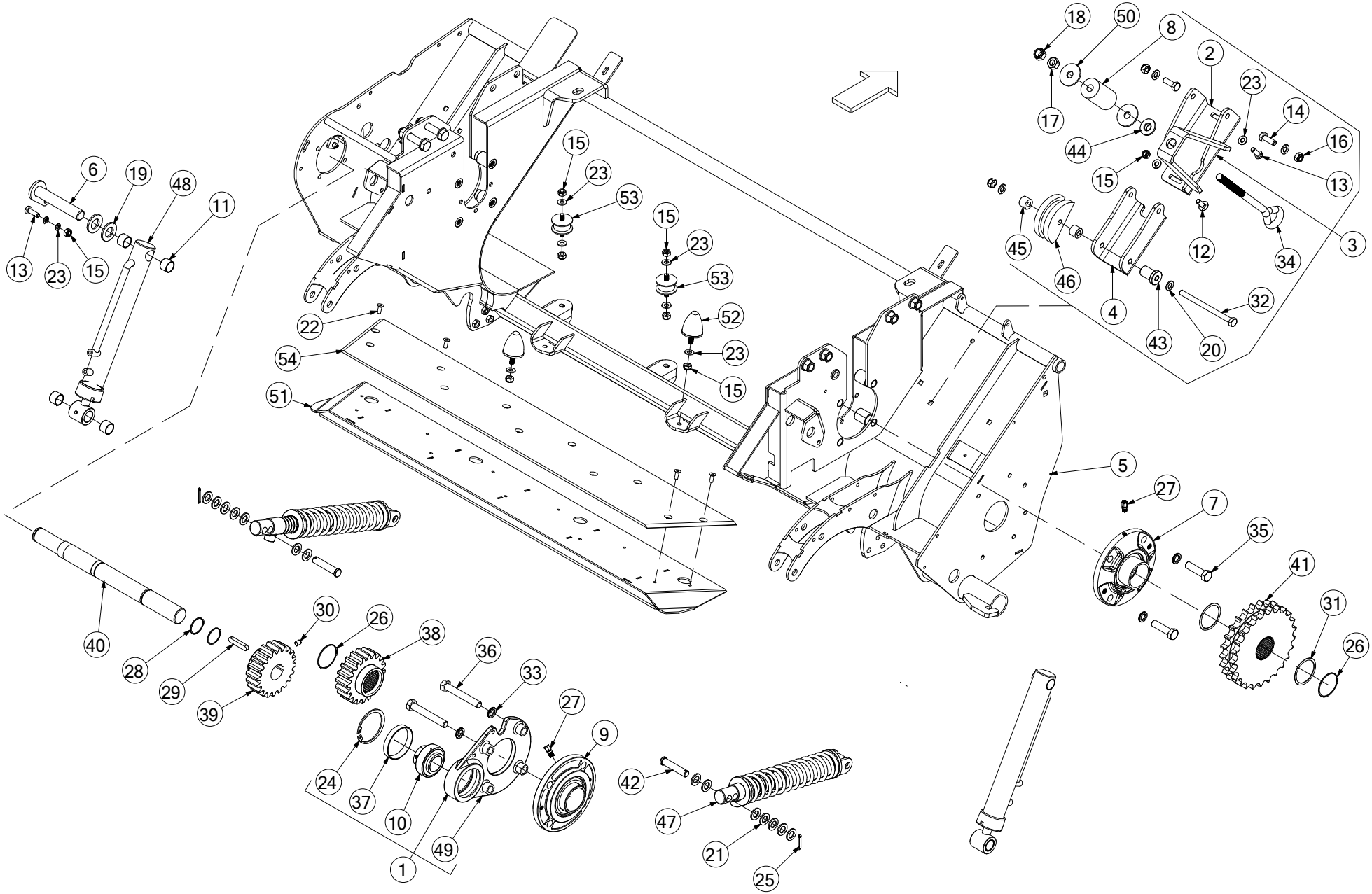
18
50
8
2
23
14
16
13
17
44
15
3
45
12
34
46
4
32
43
20
6
19
48
11
13
23
15
15
23
53
15
23
53
52
23
15
22
54
51
5
27
7
35
41
31
26
40
28
29
39
30
26
38
36
33
27
9
24
37
10
49
1
42
47
21
25

No.	Part No	Description	Qty
1	ACH00331	BEARING HOLDER ASSY	1
INCLUDES ITEMS 10, 24, 37 & 49			
2	ACH00864	DUPLEX CHAIN TENSIONER BASE	1
3	ACH00865	DUPLEX TENSIONER (SP	1
COMPLETE ASSEMBLY			
4	ACH02294	DUPLEX TENSIONER WELD ASSY	1
5	ACH03043	CHOPPER UNIT CHASSIS KIT	1
USED WITH 25K SUSPENSION FLOOR FROM SERIAL No 662200 (FUSION 3), 710486 (F5), 802926 (V6) & 900300 (VARIO)			
5	ACH03043	CHOPPER UNIT CHASSIS KIT	1
USED WITH 0K & 15K SUSPENSION FLOOR FROM SERIAL No 710802 (F5), 803233 (V6) & 900300 (VARIO)			
5	ACH02311	CHOPPER CHASSIS WELD STD FLOOR	1
USED ON STD 25 KNIFE FLOOR UP TO SERIAL No 662199 (FUSION 3), 710485 (F5), 802925 (V6) & 900299 (VARIO)			
5	ACH02311	CHOPPER CHASSIS WELD STD FLOOR	1
USED ON STD 0K & 15K FLOOR UP TO SERIAL No 710801 (F5), 803232 (V6) & 900299 (VARIO)			
5	ACH01583	CHOPPER CHASSIS FLEXI INTAKE WELD	1
USED ON 0K & 15K SUSPN FROM SERIAL No 712563 (F5), 805370 (V6) & 900601 (VARIO)			
5	ACH01583	CHOPPER CHASSIS FLEXI INTAKE WELD	1
USED ON 25K SUSPN FROM SERIAL No 664035 (FUS 3), 712593 (F5), 805384 (V6) & 900601 (VARIO)			
6	ALA00247	DROP FLOOR RAM PIN Z/P	2
7	ARC00067	ROTOR BEARING HOUSING ASSY	1
8	KST00089	DUPLEX CHAIN BUFFER KIT	1
(REPLACES CBE00174) INCLUDES WASHERS (ITEM 50) COMPRESS BUFFER TO 85MM WHEN ADJUSTING DUPLEX CHAIN			
9	CBR00078	BEARING FEC 60 4 BOLT FLANGE	1
10	CBR00093	BEARING INSERT INA GYE 40 KRRB	1
11	CBR00101	BEARING GLACIER PM 2525 DX	8
12	CFA00017	SETSCREW M10X30 CUP SQ Z/P	1
13	CFA00025	SETSCREW M10X30	3
14	CFA00033	SETSCREW M12X35 Z/P	2
15	CFA00123	NUT M10 NYLOC	28
16	CFA00124	NUT M12 NYLOC	3
17	CFA00127	NUT M16	1
18	CFA00128	NUT M16 NYLOC	9
19	CFA00135	WASHER FLAT 1" Z/P	4
20	CFA00138	WASHER FLAT 12MM Z/P	4
21	CFA00140	WASHER FLAT 16MM Z/P	16
22	CFA00765	SETSCREW M8X20 CSK Z/P	11
23	CFA00201	WASHER FLAT 10 MM Z/P	26
24	CFA00232	CIRCLIP 85MM INTERNAL	1
25	CFA00450	SPLIT PIN 4 X36 Z/P	2
26	CFA00513	CIRCLIP 60MM EXTERNAL	2
27	CFA00550	ROTOR BEARING GREASE FITTING	2
28	CFA00551	CIRCLIP 40MM EXTERNAL	2
29	CFA00558	KEY 12X8X60	1
30	CFA00559	GRUBSCREW M10X12	1
31	CFA00637	SHIM 60X70X1	2
32	CFA00747	BOLT M12X170Z/P	1
33	CFA00783	WASHER NL16 NORD-LOCK	8
34	CFA01048	EYE BOLT M16X280 DACROMET	1
REPLACES CFA00784			
35	CFA00786	BOLT M16X60 Z/P DIN931 GRADE 10.9	4
36	CFA00787	BOLT M16X100 Z/P DIN931 GRADE 10.9	4

No.	Part No	Description	Qty
37	CMH00245	BEARING RETAINER 1040 35MM	1
38	CMH00652	GEAR SPUR MOD6 20 TOOTH SPLINE	1
39	CMH00653	GEAR SPUR MOD6 20T 40MM ID	1
40	CMH00657	SHAFT 40 X 480.5 STEPPED	1
41	CMH00659	SPROCKET 1" PITCH 25 T DUPLEX	1
42	CMH00961	PIN CLEVIS 16X80 & DIA 4 C.HOLE	2
43	CMH01022	BUSH 8X35X45 STEPPED	1
44	CMH01109	WASHER 17X40X12 Z/P	1
45	CMH01110	BUSH 12X25X19.5	2
46	CPL00055	CHAIN TENSIONER SLIDE 1"DUPLEX	1
47	CRA00186	RAM PICKUP BALER	2
USED WITH STD PICK-UP (CAN ALSO USE CRA00292 AS A DIRECT REPLACEMENT)			
47	CRA00292	RAM PICK UP REEL (CAMLESS)	2
MUST BE USED WITH CAMLESS PICK-UP (CAN ALSO BE USED ON STD PICK-UP INSTEAD OF CRA00186)			
48	CRA00193	RAM CHOPPER FLOOR 20X40 BW	2
49	CTP00391	BEARING HOLDER ASSY SPUR GEARS	1
REPLACES ACH00330			
50	CZD05074	4MM L WASHER 16X68X4 Z/P	2
REPLACES CZD04321			
51	ACH01587	CHOPPER CHASSIS INTAKE PLATE	1
USED ON 0K & 15K SUSPN FROM SERIAL No 712563 (F5), 805370 (V6) & 900601 (VARIO)			
51	ACH01587	CHOPPER CHASSIS INTAKE PLATE	1
USED ON 25K SUSPN FROM SERIAL No 664035 (FUS 3), 712593 (F5), 805384 (V6) & 900601 (VARIO)			
52	CBE00344	BUFFER RUBBER 50X58 M10/28 68SH	3
53	CBE00345	RUBBER BUFFER 50X26 M10	4
54	CPL00242	NYLON WEAR PLATE PICKUP ANGLED	1
USED ON 0K & 15K SUSPN FROM SERIAL No 712563 (F5), 805370 (V6) & 900601 (VARIO)			
54	CPL00242	NYLON WEAR PLATE PICKUP ANGLED	1
USED ON 25K SUSPN FROM SERIAL No 664035 (FUS 3), 712593 (F5), 805384 (V6) & 900601 (VARIO)			

Pick-up 5 (897)

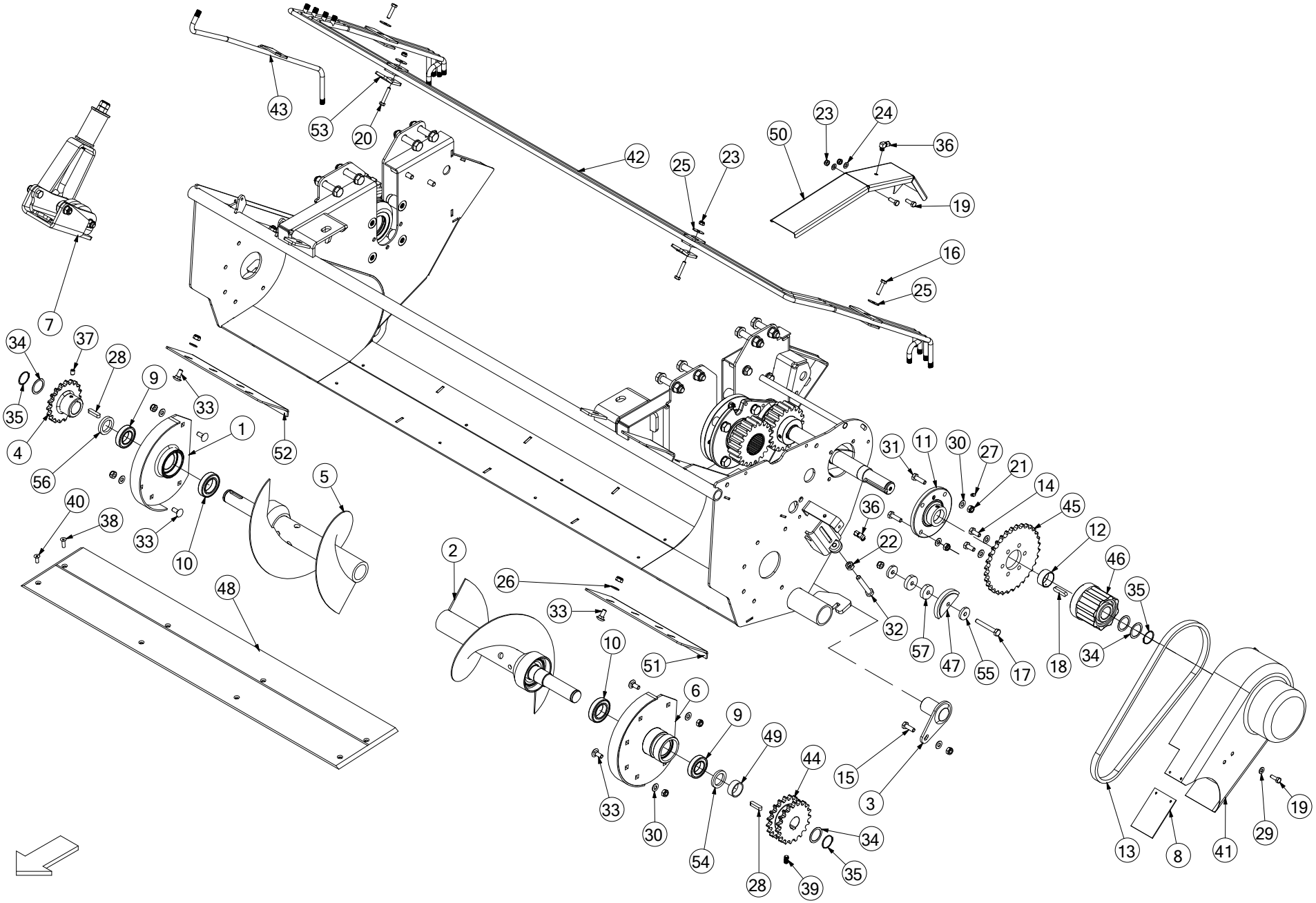
43
53
20
42
25
23
50
23
24
36
19
16
25
7
34
37
28
9
33
35
4
56
1
52
5
40
38
33
10
48
2
26
33
10
51
6
9
49
44
15
3
33
30
54
28
39
34
35
31
11
30
27
21
14
45
36
22
12
46
32
57
47
55
17
18
35
34
13
8
41
29
19

No.	Part No	Description	Qty
1	CTP00503	CHOPPER UNIT AUGER HOUSING RHS	1
2	ACH00314	AUGER ASSY (LEFT)	1
		USED UP TO SERIAL No 662199 (FUSION 3), 710485 (F5), 802925 (V6) & 900299 (VARIO) - [STANDARD FLOOR]	
2	ACH01458	AUGER ASSY BIG (LEFT)	1
		USED FROM SERIAL No 662200 (FUSION 3), 710486 (F5), 802926 (V6) & 900300 (VARIO) - [SUSPENSION FLOOR]	
3	ACH00321	PIN CHOPPER FLOOR HINGE Z/P	2
4	ACH00326	SPROCKET 19T AUGER ASM (RIGHT)	1
		USED UP TO SERIAL No 662199 (FUSION 3), 710485 (F5), 802925 (V6) & 900299 (VARIO) - [STANDARD FLOOR]	
4	ARC00431	SPROCKET 15T AUGER ASM (RIGHT)	1
		USED FROM SERIAL No 662200 (FUSION 3), 710486 (F5), 802926 (V6) & 900300 (VARIO) - [SUSPENSION FLOOR]	
5	ACH00327	AUGER ASSY (RIGHT)	1
		USED UP TO SERIAL No 662199 (FUSION 3), 710485 (F5), 802925 (V6) & 900299 (VARIO) - [STANDARD FLOOR]	
5	ACH01456	AUGER ASSY BIG (RIGHT)	1
		USED FROM SERIAL No 662200 (FUSION 3), 710486 (F5), 802926 (V6) & 900300 (VARIO) - [SUSPENSION FLOOR]	
6	CTP00504	CHOPPER UNIT AUGER HOUSING LHS	1
7	ACH00865	DUPLEX TENSIONER (SPRING)	1
8	CBE00033	RUBBER 120X80 CHAIN GUARD BALER	1
9	CBR00001	BEARING 6007 2RS	2
10	CBR00076	BEARING 6008 2RS	2
11	CBR00104	BEARING INA TME 40 GE 40 KPPB3	1
12	CBR00268	BEARING GLACIER DU 4	1
13	CCH02025	CHAIN ASA60H 3/4 62 INC LINK	1
		(IF AUGER SPROCKET IS 19T USE AS IS & IF AUGER SPROCKET IS 15T REMOVE 2 LINKS)	
14	CFA00024	SETSCREW M10X25 Z/P	6
15	CFA00025	SETSCREW M10X30	3
16	CFA00055	BOLT M8X35 Z/P	2
17	CFA00075	BOLT M10X75 Z/P	1
18	CFA00081	KEY 10X8X45	1
19	CFA00102	SETSCREW M8X25 Z/P	3
20	CFA00106	BOLT M8X45 Z/P	2
21	CFA00123	NUT M10 NYLOC	28
22	CFA00125	NUT M12 Z/P	1
23	CFA00132	NUT M8 NYLOC Z/P	4
24	CFA00147	WASHER FLAT 8MM Z/P	2
25	CFA00149	WASHER MUDWING M8 31.75OD	4
26	CFA00201	WASHER FLAT 10 MM Z/P	10
27	CFA00217	GREASE NIPPLE M6X1.0 ST	1
28	CFA00239	KEY 10X8X40	2
29	CFA00249	WASHER SKM8	1
30	CFA00251	WASHER SKM10	24
31	CFA00311	SETSCREW M10X35 Z/P	4
32	CFA00330	BOLT M12X80 Z/P	1
33	CFA00442	SETSCREW M10X25 CUP SQ	19
34	CFA00512	SHIM 35X45X1.0 Z/P	4
35	CFA00514	CIRCLIP 35MM EXTERNAL	3
36	CFA00542	OILER FITTING 90 DEG 1/8 BSP	2
37	CFA00559	GRUBSCREW M10X12	1
38	CFA00582	SETSCREW M8X25 CSK ZP	4
39	CFA00625	M10 x 20 GRUBSCREW	1
40	CFA00765	SETSCREW M8X20 CSK ZP	4

No.	Part No	Description	Qty
41	CGD00057	GUARD SLIPCLUTCH PICKUP REEL	1
42	CHY02606	PIPE ASSY HYD CHOPPER UNIT	1
43	CHY02786	STEEL PIPE WELD ASSY	1
		USED WITH SELECTABLE KNIFE CHOPPER UNITS ONLY	
44	CMH00633	SPROCKET 3/4" PITCH 19T DOUBLE	1
		USED UP TO SERIAL No 662199 (FUSION 3), 710485 (F5), 802925 (V6) & 900299 (VARIO) - [STANDARD FLOOR]	
44	CMH00227	SPROCKET 3/4"PITCH 15T DOUBLE	1
		USED FROM SERIAL No 662200 (FUSION 3), 710486 (F5), 802926 (V6) & 900300 (VARIO) - [SUSPENSION FLOOR]	
45	CMH00727	PLATEWHEEL 3/4" PITCH 32T	1
46	CMT00063	CLUTCH STANDARD PICK-UP	1
		STANDARD PICK-UP	
46	CMT00381	CLUTCH CAMLESS (602175) EK34B	1
		CAMLESS PICK-UP	
46a	CMH02697	CAMLESS CLUTCH RETAINING BUSH	1
		CAMLESS PICK-UP	
46b	CFA002319	BOLT M10X30 SOC CAP 8.8 Z/P	1
		CAMLESS PICK-UP	
47	CPL00043	PLASTIC CHAIN TENSIONER (REEL)	1
48	CPL00087	NYLON WEAR PLATE RECTANGULAR	1
		USED ON STD 0K & 15K FLOOR UP TO SERIAL No 710801 (F5), 803232 (V6) & 900299 (VARIO)	
48	CPL00087	NYLON WEAR PLATE RECTANGULAR	1
		USED ON STD 25 KNIFE FLOOR UP TO SERIAL No 662199 (FUSION 3), 710485 (F5), 802925 (V6) & 900299 (VARIO)	
48	CPL00217	NYLON WEAR PLATE PICKUP ANGLED	1
		USED ON 0K & 15K SUSPN ON SERIAL No 710802 - 711308 (F5), 803233 - 803695 (V6) & 900300 - 900412 (VARIO)	
48	CPL00217	NYLON WEAR PLATE PICKUP ANGLED	1
		25K SUSP ON SERIAL No 662200-663378 (FUS 3), 710486-711308 (F5), 802926-803695 (V6) & 900300-900421 (VARIO)	
48	CPL00244	NYLON WEAR PLATE PICKUP ANGLED	1
		USED ON 0K & 15K SUSPN ON SERIAL No 711309 - 712562 (F5), 803696 - 805369 (V6) & 900413 - 900600 (VARIO)	
48	CPL00244	NYLON WEAR PLATE PICKUP ANGLED	1
		25K SUSP ON SERIAL No 663379-664034 (FUS 3), 711309-712592 (F5), 803696-805383 (V6) & 900422-900600 (VARIO)	
48	CPL00242	NYLON WEAR PLATE PICKUP ANGLED	1
		USED ON 0K & 15K SUSPN FROM SERIAL No 712563 (F5), 805370 (V6) & 900601 (VARIO)	
48	CPL00242	NYLON WEAR PLATE PICKUP ANGLED	1
		USED ON 25K SUSPN FROM SERIAL No 664035 (FUS 3), 712593 (F5), 805384 (V6) & 900601 (VARIO)	
49	CXT00185	TUBE 42.4X3X16	1
50	CZB02160	1.5MM L SPUR GEAR GUARD BALER	1
51	CZD02227	4MM L AUGER CLEANING PLATE LH	1
52	CZD04345	4MM L AUGER CLEANING PLATE RH	1
53	CZF02904	6MM L GUARD BRACKET BALER	2
54	CZF05110	6MM L SPACER	1
55	CZF05111	6MM L PART SPACER	2
56	CZG02115	8MM L AUGER SPACER	1
57	CZH02584	10MM L WASHER 40X10.5 Z/P	2

Pick-up drop floor [Up to Serial No 662199 (Fusion) 710485 (F5)] (393)

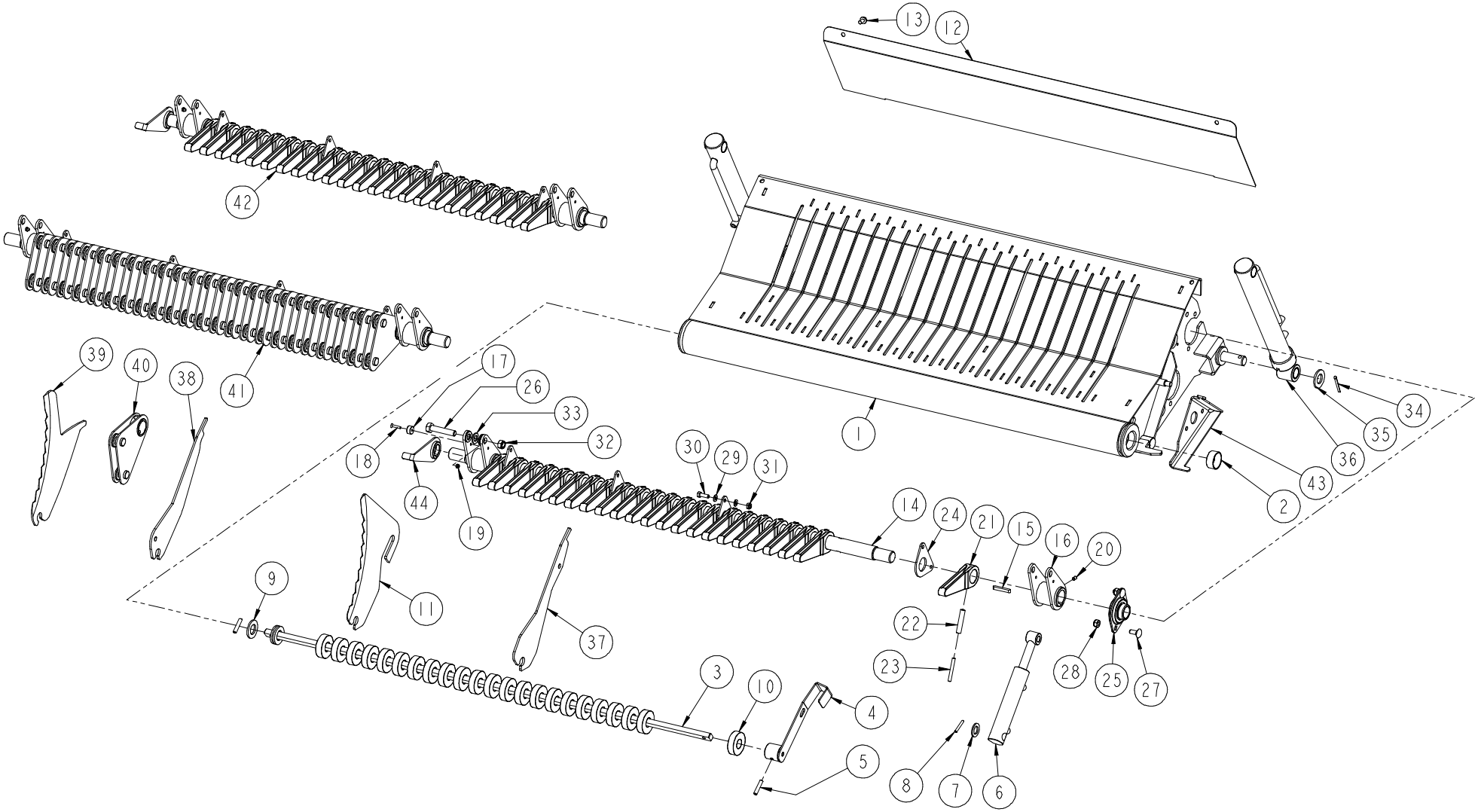

No.	Part No	Description	Qty
1	ACH02586	25K DROP FLOOR WELD STD	1
25K STD CHOPPERS - SERIAL No 656829 - 662199 (FUSION) & SERIAL No 708118 - 710485 (F5000) [Specify Serial No]			
1	ACH02325	23K DROP FLOOR WELD ASSY	1
23 KNIFE FUSION CHOPPER UNITS UP TO SERIAL No 656828 (FUSION) [Specify Machine/Serial No/Year]			
1	ACH00299	23K KNIFE FLOOR WELD ASM F5	1
23 KNIFE F5 CHOPPER UNITS UP TO SERIAL No 708117 (F5000) [Specify Machine/Serial No/Year]			
2	CBR00268	BEARING GLACIER DU 4	2
3	CMH00641	SHAFT 22 X 1310	1
4	ACH00323	KNIFE RELEASE LEVER ASSY	1
5	CFA00009	ROLL PIN 8X40	2
6	CRA00185	RAM KNIFE ACTUATION BW	2
6	CRA00713	RAM KNIFE CHOPPING ADJ END	2
ALTERNATIVE OPTION (TO CRA00185) WHICH ALLOWS ADJUSTMENT TO SET KNIFE CUTTING HEIGHT			
7	CFA00413	WASHER FLAT 20MM Z/P	4
8	CFA00073	ROLL PIN 6X40	2
9	CFA00135	WASHER FLAT 1" Z/P	4
10	CEL00154	MAGNET 60 X24 X 17	25
11	CKN00014	KNIFE CHOPPER UNIT	25
STANDARD KNIVES			
12	CZB02203	1.5MM L GRASS GUARD CHOPPER F5	1
13	CFA00519	SETSCREW M8X16 FLD ZP	1
14	CMH01477	SHAFT 35X1315 (25 K BAR)	1
25 KNIFE CHOPPERS FROM SERIAL No 656829 (FUSION) & SERIAL No 708118 (F5000) [Specify Machine/Serial No/Year]			
14	CMH01068	SHAFT35X1305 (23K BAR)	1
23 KNIFE CHOPPERS UP TO SERIAL No 656828 (FUSION) & SERIAL No 708117 (F5000) [Specify Machine/Serial No/Year]			
15	CFA00387	KEY 8X7X50	2
16	CTP00372	KNIFE RAM ACTUATOR CAST	2
REPLACES ACH02286			
17	CEL00059	MAGNET 20 X 10 260369	1
18	CFA00261	SETSCREW M5X25 CSK HEX SS	1
19	CFA00348	NUT M5 NYLOC SS	1
20	CFA00051	GRUBSCREW M8X10	2
21	CTP00266	KNIFE ACTUATOR ARM	25
22	CFA00504	ROLL PIN 12X60 ZP	25
23	CFA00642	ROLL PIN M7X60	25
24	CZD04279	4MM L KNIFE ARM LOCK BAR	4
25	CBR00072	BEARING INA 2 BOLT RAE 30 NPPB	2
26	CFA00547	BOLT M14X70 Z/P	2
27	CFA00068	BOLT M10X25 CUP SQ. Z/P	4
28	CFA00123	NUT M10 NYLOC	4
29	CFA00147	WASHER FLAT 8MM Z/P	16
30	CFA00102	SETSCREW M8X25 Z/P	8
31	CFA00132	NUT M8 NYLOC Z/P	8
32	CFA00126	NUT M14 NYLOC	2
33	CFA00222	WASHER FLAT 14MM Z/P	8
34	CFA00669	SPLIT PIN 8X50 Z/P	2
35	CFA00135	WASHER FLAT 1" Z/P	6
36	CRA00193	RAM CHOPPER FLOOR 20	2
37	CZE00143	5MM L KNIFE BLANK BALER	12
STANDARD KNIVES			

No.	Part No	Description	Qty
38	CZE00168	5MM L KNIFE BLANK (GERMAN)	12
GERMAN KNIVES ONLY - UP TO SERIAL No 659804 (FUSION 3), 710086 (F5 SERIES) & 900171 (FUSION VARIO)			
39	CKN00016	KNIFE FOR GERMAN DROP FLOOR	23
GERMAN KNIVES ONLY - UP TO SERIAL No 659804 (FUSION 3), 710086 (F5 SERIES) & 900171 (FUSION VARIO)			
40	ACN00055	KNIFE HOLDER GERMAN	23
GERMAN KNIVES ONLY - UP TO SERIAL No 659804 (FUSION 3), 710086 (F5 SERIES) & 900171 (FUSION VARIO)			
41	ALA00204	23 KNIFE ARM ASSY (GERMAN)	1
23K-GERMAN KNIVES-UP TO SERIAL No 656828 (FUSION) & SERIAL No 708117 (F5000) [Specify Machine/Serial No/Year]			
42	ALA00550	25 KNIFE BAR COMPLETE ASSY	1
25 KNIFE STANDARD FROM SERIAL No 656829 (FUSION) & SERIAL No 708118 (F5000) [Specify Machine/Serial No/Year]			
42	ALA00202	23 KNIFE ARM ASSY (STANDARD)	1
23 KNIFE STANDARD UP TO SERIAL No 656828 (FUSION) & SERIAL No 708117 (F5000) [Specify Machine/Serial No/Year]			
43	CZD02356	LOCK BRACKET FOR GERMAN	1
GERMAN KNIVES ONLY - UP TO SERIAL No 659804 (FUSION 3), 710086 (F5 SERIES) & 900171 (FUSION VARIO)			
44	ACN00101	KNIFE MAGNET LEVER ASSY (25 K)	1
25 KNIFE ONLY			
44a	CFA00402	CIRCLIP 30MM EXTERNAL ZP	1
44b	CFA00949	KEY 8X7X10	1

Pick-up drop floor suspension (971)

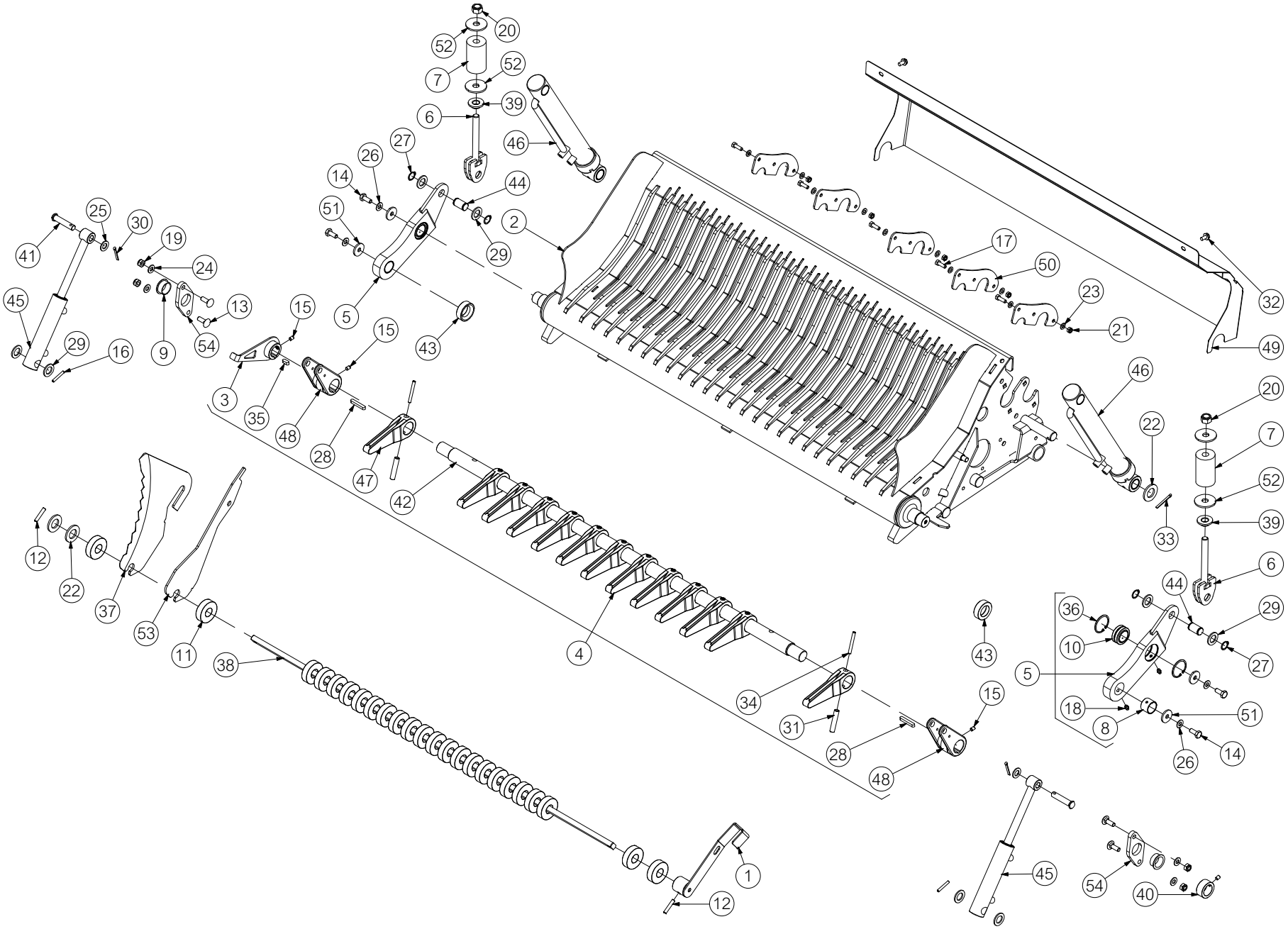

No.	Part No	Description	Qty
1	ACH00323	KNIFE RELEASE LEVER ASSY	1
2	ACH01607	SUSPENSION FLOOR WELD 25K BIG ROTOR	1
25K SUSPENSION FLOOR FROM SERIAL No 662200 (FUSION 3), 710486 (F5), 802926 (V6) & 900300 (VARIO)			
2	ACH03015	SUSPENSION FLOOR 15K WELD ASM BIG ROTOR	1
15K SUSPENSION FLOOR FROM SERIAL No 710802 (F5), 803233 (V6) & 900300 (VARIO)			
3	CTP00553	SENSOR READOUT KNIFE ARM	1
REPLACES ACN00147			
4	ALA00790	25 KNIFE BAR COMP ASM BIG ROTOR	1
4	ALA00822	15 KNIFE ARM COMP ASM BIG ROTOR	1
5	ALA00789	LINK ARM ASSY DROP FLOOR	2
REPLACES ALA00751			
6	CTP00536	FLOOR SUSPENSION SPRING TENSIONER BRCKT	2
REPLACES ALA00754 WHICH CAN ALSO BE USED			
7	KST00089	DUPLEX CHAIN BUFFER KIT	2
80MM INSTALLATION LENGTH (INCLUDES 1x CBE00340 & 2x ITEM 52)			
8	CBR00007	BEARING GLACIER PM 3025 DX	2
9	CBR00068	BEARING 30X34X16 STEPPED PLASTIC	2
10	CBR00127	BEARING SPHERICAL 30MM GE30ES 2RS	2
11	CEL00154	MAGNET 60 X24 X 17	25
12	CFA00009	ROLL PIN 8X40	2
13	CFA00017	SETSCREW M10X30 CUP SQ Z/P	4
14	CFA00024	SETSCREW M10X25 Z/P	4
15	CFA00051	GRUBSCREW M8X10	4
16	CFA00073	ROLL PIN 6X40	2
17	CFA00102	SETSCREW M8X25 Z/P	15
18	CFA00118	GREASE NIPPLE M8X1.25 STRAIGHT	4
19	CFA00123	NUT M10 NYLOC	4
20	CFA00128	NUT M16 NYLOC	2
21	CFA00132	NUT M8 NYLOC Z/P	16
22	CFA00135	WASHER FLAT 1" Z/P	4
23	CFA00147	WASHER FLAT 8MM Z/P	30
24	CFA00201	WASHER FLAT 10 MM Z/P	4
25	CFA00222	WASHER FLAT 14MM Z/P	2
26	CFA00251	WASHER SKM10	4
27	CFA00339	CIRCLIP 20MM EXTERNAL	4
28	CFA00387	KEY 8X7X50	2
29	CFA00413	WASHER FLAT 20MM Z/P	8
30	CFA00475	SPLIT PIN 5X40 Z/P	2
31	CFA00504	ROLL PIN 12X60 ZP	25
32	CFA00519	SETSCREW M8X16 FLD ZP	2
33	CFA00556	SPLIT PIN 6X50 Z/P	2
34	CFA00642	ROLL PIN M7X60	25
35	CFA00949	KEY 8X7X10	1
36	CFA01083	CIRCLIP 50MM INTERNAL	4
37	CKN00014	KNIFE CHOPPER UNIT STD (LONG)	25
38	CMH00641	SHAFT 22 X 1310	1
39	CMH01109	WASHER 17X40X12 Z/P	2
40	CMH01314	BUSH 30X45X20	1
41	CMH01483	PIN 14 X 70 Z/P	2
42	CMH01477	SHAFT 35X1315 (25 K BAR)	1

No.	Part No	Description	Qty
42	CMH01731	SHAFT 35X1320 SUSP FLOOR (15K BAR)	1
43	CMH01656	BUSH 30X50X16 Z/P	2
44	CMH01711	PIN 20X36 Z/P	2
45	CRA00185	RAM KNIFE ACTUATION BW	2
46	CRA00193	RAM CHOPPER FLOOR 20X40 BW	2
47	CTP00266	KNIFE ACTUATOR ARM	25
REPLACES ACH02267			
48	CTP00372	KNIFE RAM ACTUATOR	2
49	CZB00380	1.5MM D-FLOOR GUARD FUS3 & F5	1
USED ON FUSION 3 UP TO SERIAL No 664000 & F5 MACHINES UP TO SERIAL No 712266			
49	CZB00382	1.5MM SUSPENSION DROP FLOOR GUARD	1
USED ON FUSION 3 FROM SERIAL No 664001 & F5 MACHINES FROM SERIAL No 712267			
49	AGD00002	DROP FLOOR GUARD V6 & VARIO	1
50	CZD02628	4MM L DROP FLOOR PART	5
51	CZD02959	WASHER 10X40X4	4
52	CZD05074	4MM L WASHER 16X68X4	4
53	CZE00306	5MM L KNIFE BLANK (BIG ROTOR)	1
54	CZH03537	10MM L SHAFT BUSH BRACKET	2

Pick-up drop floor select (803)

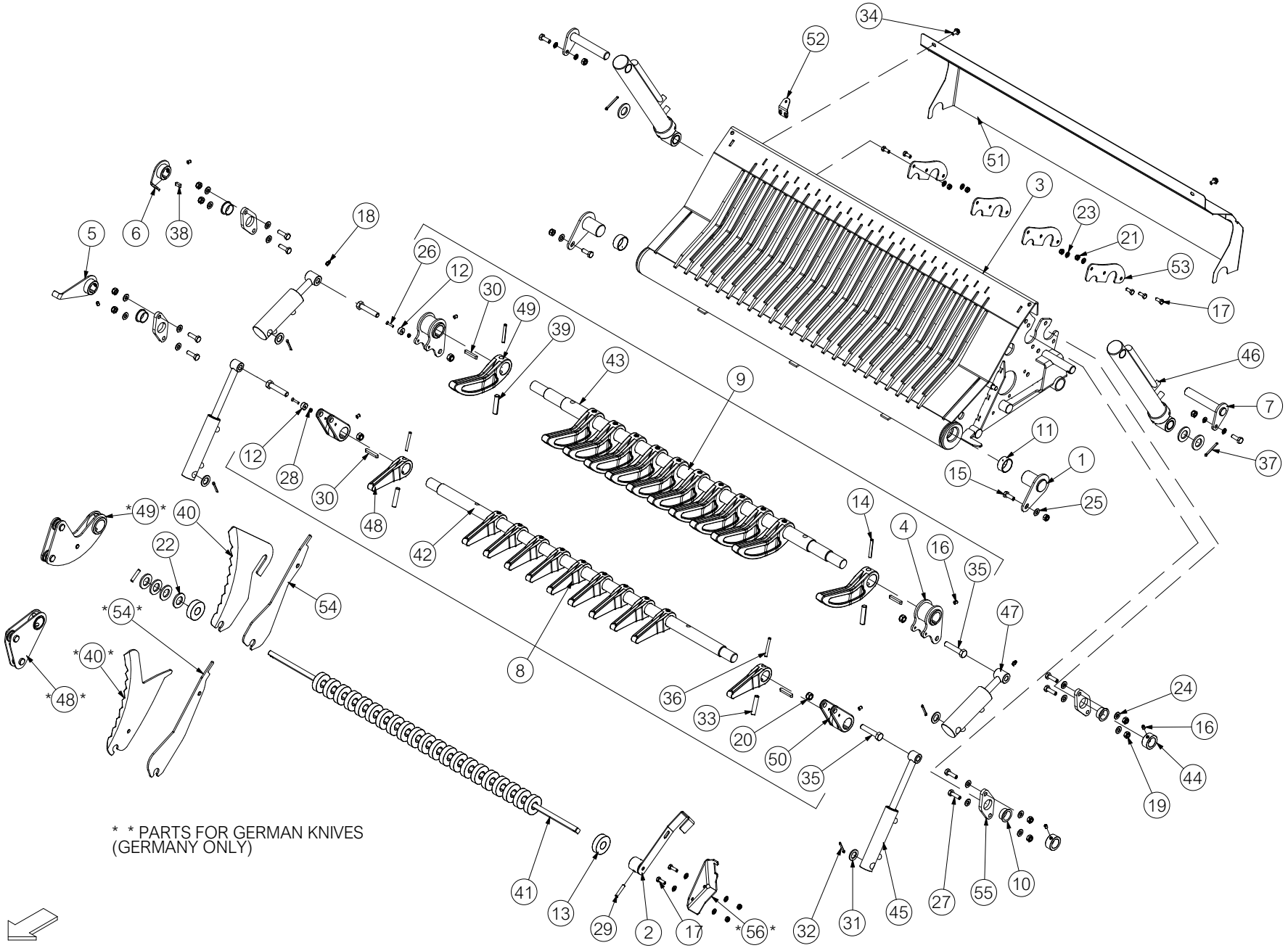

No.	Part No	Description	Qty
1	ACH00321	PIN CHOPPER FLOOR HINGE Z/P	2
2	ACH00323	KNIFE RELEASE LEVER ASSY	1
3	ACH01337	DROP FLOOR WELD ASM 25K SELECT	1
25K FLOOR USED UP TO SERIAL No 662199 (FUSION 3), 710485 (F5), 802925 (V6) & 900299 (VARIO)			
3	ACH01093	DROP FLOOR WELD ASM 23K SELECT	1
23K FLOOR USED UP TO SERIAL No 656828 (FUSION 3), 708117 (F5) & 801429 (V6) - [REPLACED BY 25K STD FLOOR]			
3	ACH01113	DROP FLOOR WELD ASM 15K SELECT	1
15K FLOOR USED UP TO SERIAL No 710801 (F5), 803232 (V6) & 900299 (VARIO) - [REPLACED BY SUSPENSION FLOOR]			
4	ACH01096	KNIFE ACTUATOR SELECT KNIFE	2
5	ACN00147	KNIFE ARM SELECTABLE FLOOR	1
FROM SERIAL NO 656829/708243/801354 FOR FUSION/F5/V6 (REPLACES ACN00089)			
6	ACN00127	KNIFE LEVER ARM SELECTABLE FLOOR	1
FROM SERIAL NO 656829/708243/801354 FOR FUSION 3/F5/V6			
7	ALA00247	DROP FLOOR RAM PIN Z/P	2
8	ALA00577	25K SELECT KNIFE ARM 1 ASSY	1
8	ALA00436	23K SELECT KNIFE ARM 1 ASSY	1
8	ALA00460	15K SELECT KNIFE ARM 1 ASSY	1
8	ALA00630	25K GERMAN SELECT ARM 1 ASSY	1
** * GERMAN KNIVES ONLY (25K ARM ASM) UP TO SERIAL No 659804 (FUS 3), 710086 (F5), 802638 (V6) & 900171 (VARIO)*			
8	ALA00488	23K GERMAN SELECT FRONT ARM ASSY	1
** * GERMAN KNIVES (23 KNIFE) COMPLETE ARM ASM (GERMANY) PRE 2014 MODELS ONLY*			
8	ALA00466	15K GERMAN SELECT ARM 1 ASSY	1
** * GERMAN KNIVES ONLY (15K ARM ASM) UP TO SERIAL No 659804 (FUS 3), 710086 (F5), 802638 (V6) & 900171 (VARIO)*			
9	ALA00437	23-25K SELECT KNIFE ARM 2 ASSY	1
9	ALA00461	15K SELECT KNIFE ARM 2 ASSY	1
9	ALA00489	23-25K GERMAN SELECT ARM 2 ASSY	1
** * GERMAN KNIVES (23 OR 25K ARM ASM) UP TO SERIAL No 659804 (FUS 3), 710086 (F5), 802638 (V6) & 900171 (VARIO)*			
9	ALA00465	15K GERMAN SELECT KNIFE ARM 2 ASSY	1
** * GERMAN KNIVES ONLY (15K ARM ASM) UP TO SERIAL No 659804 (FUS 3), 710086 (F5), 802638 (V6) & 900171 (VARIO)*			
10	CBR00068	BEARING 30X34X16 STEPPED PLAS	4
11	CBR00268	BEARING GLACIER DU 4	2
12	CEL00059	MAGNET 20 X 10 260369	2
UP TO SERIAL NO 656828/708242/801353 FOR FUSION 3/F5/V6			
13	CEL00154	MAGNET 60 X24 X 17	25
14	CFA00642	ROLL PIN 7X60 ZP	12
UP TO SERIAL NO 657563/708623/801687 FOR FUSION 3/F5/V6			
14	CFA00011	ROLL PIN 8X60 DIN 1481	12
FROM SERIAL NO 657564/708624/801688 FOR FUSION 3/F5/V6			
15	CFA00025	SETSCREW M10X30	4
16	CFA00051	GRUBSCREW M8X10	8
17	CFA00102	SETSCREW M8X25 Z/P	17
18	CFA00118	GREASE NIPPLE M8X1.25 STRAIGHT	2
19	CFA00123	NUT M10 NYLOC	12
20	CFA00126	NUT M14 NYLOC	4
21	CFA00132	NUT M8 NYLOC Z/P	17
22	CFA00135	WASHER FLAT 1" Z/P	8
23	CFA00147	WASHER FLAT 8MM Z/P	19
24	CFA00201	WASHER FLAT 10 MM Z/P	16
25	CFA00251	WASHER SKM10	2
26	CFA00261	SETSCREW M5X25 CSK HEX SS	2
27	CFA00311	SETSCREW M10X35 Z/P	8

No.	Part No	Description	Qty
28	CFA00348	NUT M5 NYLOC SS	2
29	CFA00380	ROLL PIN 8X40 Z/P	2
30	CFA00387	KEY 8X7X50	4
31	CFA00413	WASHER FLAT 20MM Z/P	4
32	CFA00475	SPLIT PIN 5X40 Z/P	4
33	CFA00504	ROLL PIN 12X60 ZP	13
34	CFA00519	SETSCREW M8X16 FLD ZP	2
35	CFA00547	BOLT M14X70 Z/P	4
36	CFA00642	ROLL PIN M7X60	13
37	CFA00669	SPLIT PIN 8X50 Z/P	2
38	CFA00883	KEY 8X7X20	1
39	CFA00504	ROLL PIN 12X60 ZP	12
UP TO SERIAL NO 657563/708623/801687 FOR FUSION 3/F5/V6			
39	CFA01009	ROLL PIN 14 X 60 Z/P DIN 1481	12
FROM SERIAL NO 657564/708624/801688 FOR FUSION 3/F5/V6			
40	CKN00014	KNIFE CHOPPER UNIT STANDARD	25
40	CKN00016	KNIFE FOR FLOOR (GERMANY ONLY)	25
*** GERMAN KNIVES ONLY - UP TO SERIAL No 659804 (FUSION 3), 710086 (F5 SERIES), 802638 (V6) & 900171 (VARIO)*			
41	CMH00641	SHAFT 22 X 1310 MAGNET	1
42	CMH01496	SHAFT 35X1320 (25 KNIFE SELECT)	1
42	CMH01225	SHAFT 35X1300 (23 KNIFE SELECT)	1
42	CMH01069	SHAFT 35X1300 (15 KNIFE SELECT)	1
43	CMH01308	SHAFT 40X1320 23-25 KNIFE SELECT	1
43	CMH01358	SHAFT 40X1305 15 KNIFE SELECT	1
44	CMH01314	BUSH 30X45X20	2
45	CRA00185	RAM KNIFE ACTUATION BW	2
46	CRA00193	RAM CHOPPER FLOOR 20X40 BW	2
47	CRA00637	RAM 45X20 SELECT KNIFE	2
48	CTP00266	KNIFE ACTUATOR ARM STANDARD	13
48	ACN00055	KNIFE HOLDER GERMAN 12MM HOLE	13
*** GERMAN KNIVES ONLY - UP TO SERIAL No 659804 (FUSION 3), 710086 (F5 SERIES), 802638 (V6) & 900171 (VARIO)*			
49	CTP00360	KNIFE ARM SELECTABLE STANDARD	12
STANDARD KNIVES (MUST ALSO ORDER LARGER ROLL PINS CFA00011 & CFA01009)			
49	ALA00467	KNIFE ARM ASSY SELECT GERMAN	12
** * GERMAN KNIVES PRE 2016 MODELS ONLY (MUST ALSO ORDER LARGER ROLL PINS CFA00011 & CFA01009)*			
50	CTP00372	KNIFE RAM ACTUATOR	2
51	CZB00380	1.5MM D-FLOOR GUARD FUS3 & F5	1
51	AGD00002	DROP FLOOR GUARD V6 & VARIO	1
52	CZC04421	3MM L DROP FLOOR MAGNET BRACKET F5500 ONLY	1
53	CZD02628	4MM L DROP FLOOR PART	5
54	CZE00143	5MM L KNIFE BLANK BLR STANDARD	1
54	CZE00168	5MM KNIFE BLANK (GERMANY ONLY)	1
55	CZH03537	10MM L SHAFT BUSH BRACKET	4
56	CZD02647	4MM GERMAN KNIFE LOCK BRACKET	1
*** GERMAN KNIVES ONLY - UP TO SERIAL No 659804 (FUSION 3), 710086 (F5 SERIES), 802638 (V6) & 900171 (VARIO)*			

Pick-up drop floor suspension select (976)

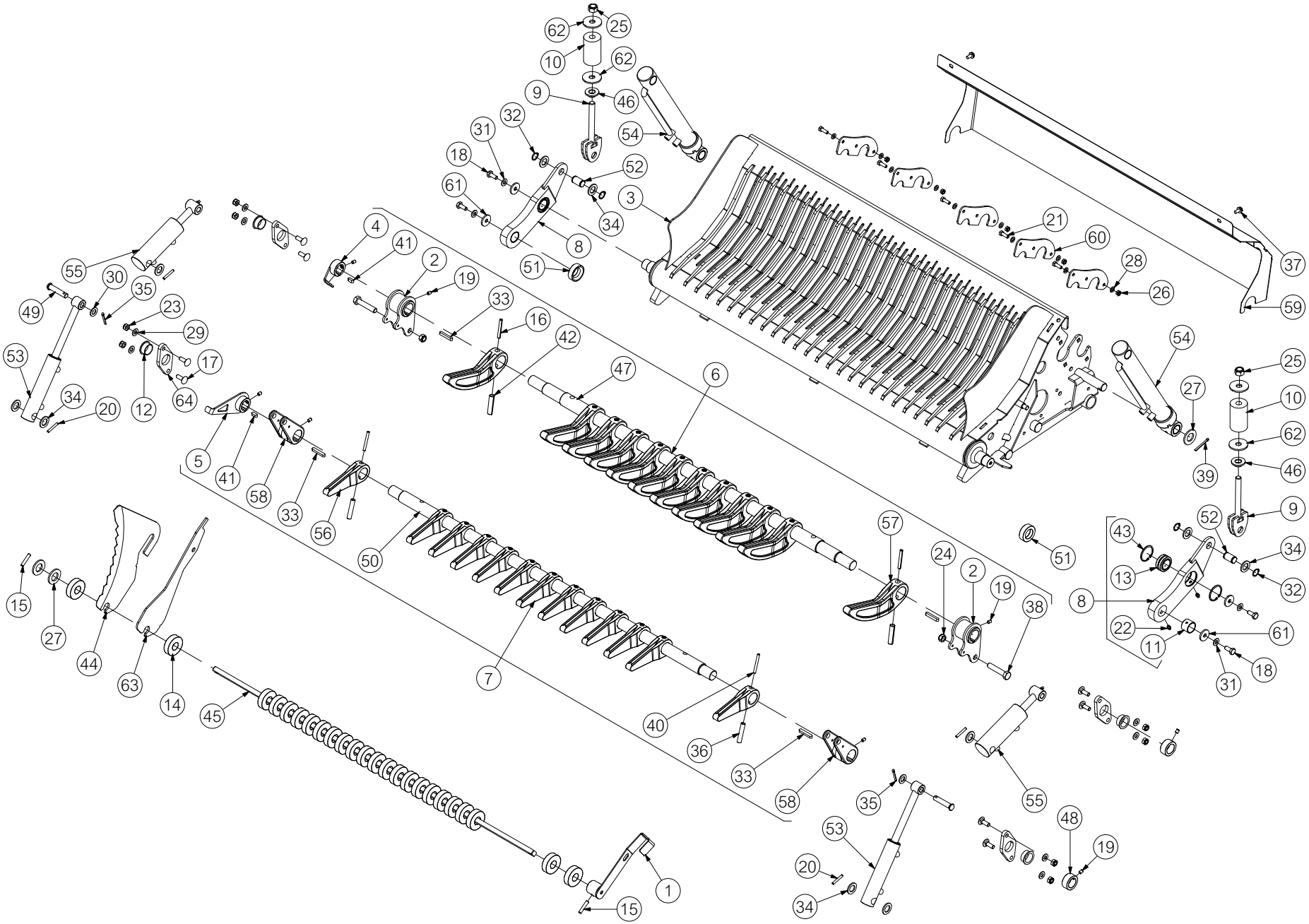

No.	Part No	Description	Qty
1	ACH00323	KNIFE RELEASE LEVER ASSY	1
2	ACH01096	KNIFE ACTUATOR SELECT KNIFE	2
3	ACH01607	SUSPENSION FLOOR WELD 25K BIG ROTOR *25K SUSPENSION FLOOR FROM SERIAL No 662200 (FUSION 3), 710486 (F5), 802926 (V6) & 900300 (VARIO)*	1
3	ACH03015	SUSPENSION FLOOR 15K WELD ASM BIG ROTOR *15K SUSPENSION FLOOR FROM SERIAL No 710802 (F5), 803233 (V6) & 900300 (VARIO)*	1
4	ACN00127	KNIFE LEVER ARM SELECTABLE FLOOR *USED UP TO SERIAL No 664000 (FUSION 3), 712266 (F5), 805179 (V6) & 900518 (VARIO)*	1
4	ACN00181	SENSOR TARGET BRACKET SELECT KNIFE *USED FROM SERIAL No 664001 (FUSION 3), 712267 (F5), 805180 (V6) & 900519 (VARIO)*	1
5	CTP00553	SENSOR READOUT KNIFE ARM *REPLACES ACN00147*	1
6	ALA00437	23-25K SELECT KNIFE ARM 2 ASSY *USED UP TO SERIAL No 664000 (FUSION 3), 712266 (F5), 805179 (V6) & 900518 (VARIO)*	1
6	ALA00923	25K SELECT KNIFE ARM 2 ASSY *USED FROM SERIAL No 664001 (FUSION 3), 712267 (F5), 805180 (V6) & 900519 (VARIO)*	1
6	ALA00832	15K SELECT KNIFE ARM 2 ASSY BIG ROTOR *USED UP TO SERIAL No 712266 (F5), 805179 (V6) & 900518 (VARIO)*	1
6	ALA00924	15K SELECT KNIFE ARM 2 ASSY BIG ROTOR *USED FROM SERIAL No 712267 (F5), 805180 (V6) & 900519 (VARIO)*	1
7	ALA00577	25K SELECT KNIFE ARM 1 ASSY	1
7	ALA00831	15 KNIFE ARM 1 SEL FLOOR BIG ROTOR	1
8	ALA00789	SUSPENSION ARM DROP FLOOR *REPLACES ALA00751*	2
9	CTP00536	FLOOR SUSPENSION SPRING TENSIONER BRCKT *REPLACES ALA00754 WHICH CAN ALSO BE USED*	2
10	KST00089	DUPLEX CHAIN BUFFER KIT *80MM INSTALLATION LENGTH (INCLUDES 1x CBE00340 & 2x ITEM 62)*	2
11	CBR00007	BEARING GLACIER PM 3025 DX	2
12	CBR00068	BEARING 30X34X16 STEPPED PLASTIC	4
13	CBR00127	BEARING SPHERICAL 30MM GE30ES 2RS	2
14	CEL00154	MAGNET 60 X24 X 17	25
15	CFA00009	ROLL PIN 8X40	2
16	CFA00011	ROLL PIN 8X60	12
17	CFA00017	SETSCREW M10X30 CUP SQ Z/P	8
18	CFA00024	SETSCREW M10X25 Z/P	4
19	CFA00051	GRUBSCREW M8X10	8
20	CFA00073	ROLL PIN 6X40	4
21	CFA00102	SETSCREW M8X25 Z/P	15
22	CFA00118	GREASE NIPPLE M8X1.25 STRAIGHT	4
23	CFA00123	NUT M10 NYLOC	8
24	CFA00126	NUT M14 NYLOC	2
25	CFA00128	NUT M16 NYLOC	2
26	CFA00132	NUT M8 NYLOC Z/P	16
27	CFA00135	WASHER FLAT 1 Z/P	4
28	CFA00147	WASHER FLAT 8MM Z/P	30
29	CFA00201	WASHER FLAT 10 MM Z/P	8
30	CFA00222	WASHER FLAT 14MM Z/P	2
31	CFA00251	WASHER SKM10	4
32	CFA00339	CIRCLIP 20MM EXTERNAL	4
33	CFA00387	KEY 8X7X50	4

No.	Part No	Description	Qty
34	CFA00413	WASHER FLAT 20MM Z/P	10
35	CFA00475	SPLIT PIN 5X40 Z/P	2
36	CFA00504	ROLL PIN 12X60 ZP	13
37	CFA00519	SETSCREW M8X16 FLD ZP	2
38	CFA00547	BOLT M14X70 Z/P	2
39	CFA00556	SPLIT PIN 6X50 Z/P	2
40	CFA00642	ROLL PIN M7X60	13
41	CFA00883	KEY 8X7X20	2
42	CFA01009	ROLL PIN 14 X 60 Z/P DIN 1481	12
43	CFA01083	CIRCLIP 50MM INTERNAL	4
44	CKN00014	KNIFE CHOPPER UNIT STD (LONG)	25
45	CMH00641	SHAFT 22 X 1310	1
46	CMH01109	WASHER 17X40X12 Z/P	2
47	CMH01308	SHAFT40X1320 23-25KNIFE SELECT	1
47	CMH01734	SHAFT 40X1320 15K SELECT ARM 2	1
48	CMH01314	BUSH 30X45X20	2
49	CMH01483	PIN 14 X 70 Z/P	2
50	CMH01496	SHAFT 35X1320 (25 K BAR) SELECT	1
50	CMH01731	SHAFT 35X1320 SUSP FLR 15K BAR	1
51	CMH01656	BUSH 30X50X16 Z/P	2
52	CMH01711	PIN 20X36 Z/P	2
53	CRA00185	RAM KNIFE ACTUATION BW	2
54	CRA00193	RAM CHOPPER FLOOR 20X40 BW	2
55	CRA00637	RAM 45X20 SELECT KNIFE	2
56	CTP00266	KNIFE ACTUATOR ARM	13
57	CTP00360	KNIFE ARM SELECTABLE FLOOR	12
58	CTP00372	KNIFE RAM ACTUATOR	2
59	CZB00380	1.5MM D-FLOOR GUARD FUS3 & F5 *USED ON FUSION 3 UP TO SERIAL No 664000 & ON F5 SERIES UP TO SERIAL No 712266*	1
59	CZB00382	1.5MM SUSPENSION DROP FLOOR GUARD *USED ON FUSION 3 FROM SERIAL No 664001 & ON F5 SERIES FROM SERIAL No 712267*	1
59	AGD00002	DROP FLOOR GUARD V6 & VARIO	1
60	CZD02628	4MM L DROP FLOOR PART	5
61	CZD02959	WASHER 10X40X4	4
62	CZD05074	4MM L WASHER 16X68X4	4
63	CZE00306	5MM L KNIFE BLANK BIG ROTOR	1
64	CZH03537	10MM L SHAFT BUSH BRACKET	4

Crop roller [On Fusion-F5-V6 from Serial No 655681-706661-800616] (775)

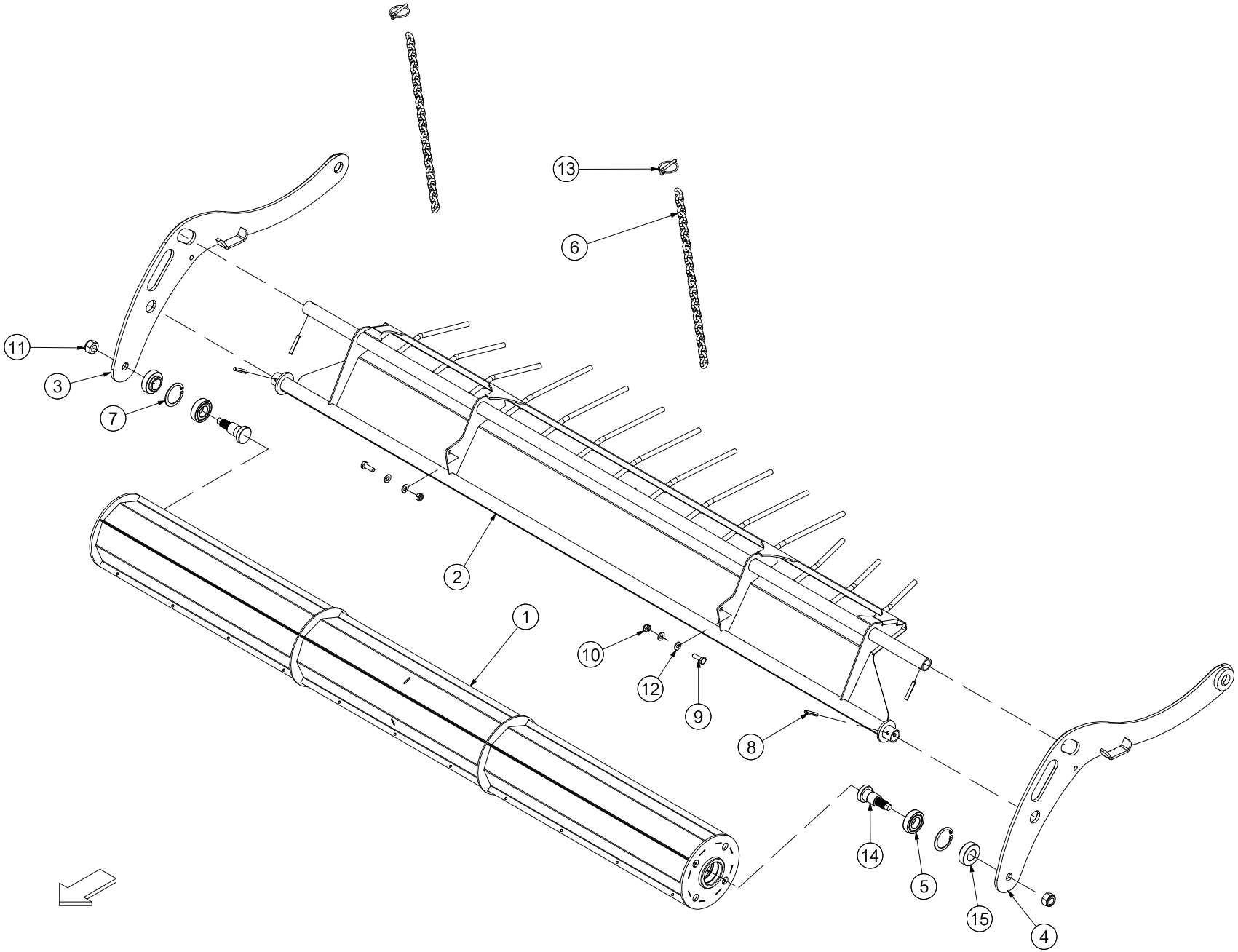

No.	Part No	Description	Qty
1	ARC00324	CROP ROLLER WELD ASSY SMALL	1
2	ARC00325	CROP ROLLER COVER PLATE ASSY	1
3	ARC00326	CROP ROLLER SIDE PLATE ASSY (RHS)	1
4	ARC00327	CROP ROLLER SIDE PLATE ASSY (LHS)	1
5	CBR00299	BEARING 206 NPPB 30MM SPHERICAL	2
6	CCH00186	CHAIN 7X20 X 30 LINKS	2
7	CFA00002	CIRCLIP INTERNAL 20X1 DIN 472	2
8	CFA00010	ROLL PIN 8X50 Z/P	4
9	CFA00025	SETSCREW M10X30 ZP	2
REPLACES CFA00016			
10	CFA00123	NUT M10 NYLOC	2
11	CFA00129	NUT M20 NYLOC	2
12	CFA00201	WASHER FLAT 10 MM Z/P	4
13	CFA00202	LINCH PIN 6MM	2
14	CMH00148	SHAFT 30X95 M20 THREAD	2
15	CMH01445	BUSH 30X50X25 Z/P	2

No.	Part No	Description	Qty

Crop roller [Camless] (966)

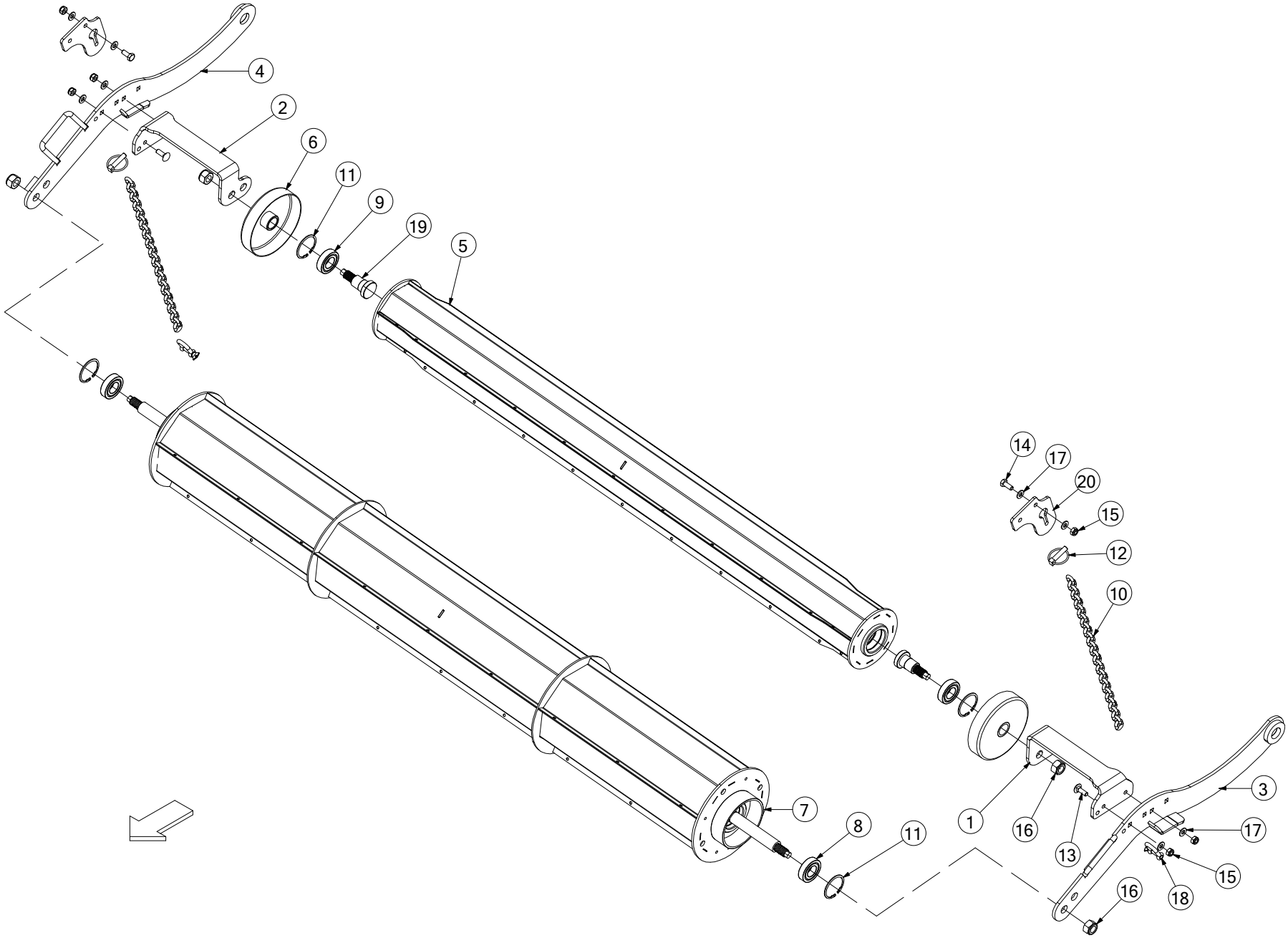

No.	Part No	Description	Qty
0	ARC00378	CROP ROLLER FULL ASSEM (CAMLESS)	1
COMPLETE ASSEMBLY (INCLUDES ITEMS 1 THROUGH 20)			
1	ACH02922	REAR CROP ROLLER HOLDER WELD ASSEM (LHS)	1
2	ACH02923	REAR CROP ROLLER HOLDER WELD ASSEM (RHS)	1
3	ARC00379	CROP ROLLER PLATE WELD ASSEM LHS (CAMLESS)	1
4	ARC00380	CROP ROLLER PLATE WELD ASSEM RHS (CAMLESS)	1
5	ARC00387	TOP ROLLER WELD ASSEM (SHORT)	1
6	ARC00392	CROP ROLLER SEAL (LARGE)	2
7	ARC00466	FRONT ROLLER ASSEM (DCR)	1
INCLUDES ITEMS 8 & 11			
8	CBR00024	BEARING 62062RS	2
9	CBR00299	BEARING 206 NPPB 30MM SPHERICAL	2
10	CCH00186	CHAIN CROP ROLLER 7X20X32 LINKS	2
11	CFA00002	62MM INTERNAL CIRCLIP DIN 472	4
12	CFA00005	LINCH PIN 10MM	2
13	CFA00017	SETSCREW M10X30 CUP SQ Z/P	4
14	CFA00024	SETSCREW M10X25 Z/P	2
15	CFA00123	NUT M10 NYLOC	6
16	CFA00129	NUT M20 NYLOC	4
17	CFA00201	WASHER FLAT 10 MM Z/P	8
18	CFA00457	D SHACKLE 0.375" GAL	2
19	CMH00148	SHAFT 30X86 M20 THREAD Z/P	2
20	CZF07624	6MM L DOUBLE CROP ROLLER CHAIN HOLDER	2
USED ON FUSION VARIO ONLY (NOT SHOWN) PRIOR TO SERIAL No 900340			
20	CZF07847	CAMLESS REEL CHAIN HANGER	1
USED ON V6 FROM SERIAL No 805001 & FUSION VARIO FROM SERIAL No 900340 (LH SIDE)			
20	ACH02980	PLATFORM BRACKET V6/ VARIO ASSY	1
USED ON V6 FROM SERIAL No 805001 & FUSION VARIO FROM SERIAL No 900340 (RH SIDE)			
20	CZF07625	6MM L DOUBLE CROP ROLLER CHAIN HOLDER F3	2
USED ON FUSION 3 ONLY (NOT SHOWN)			
20	CZF07629	6MM L CAMLESS CHAIN PLATE F5000 / V6	2
USED ON F5 BALERS & V6 PRIOR TO SERIAL No 805001 (SHOWN)			

No.	Part No	Description	Qty

PTO shaft [PWE580]

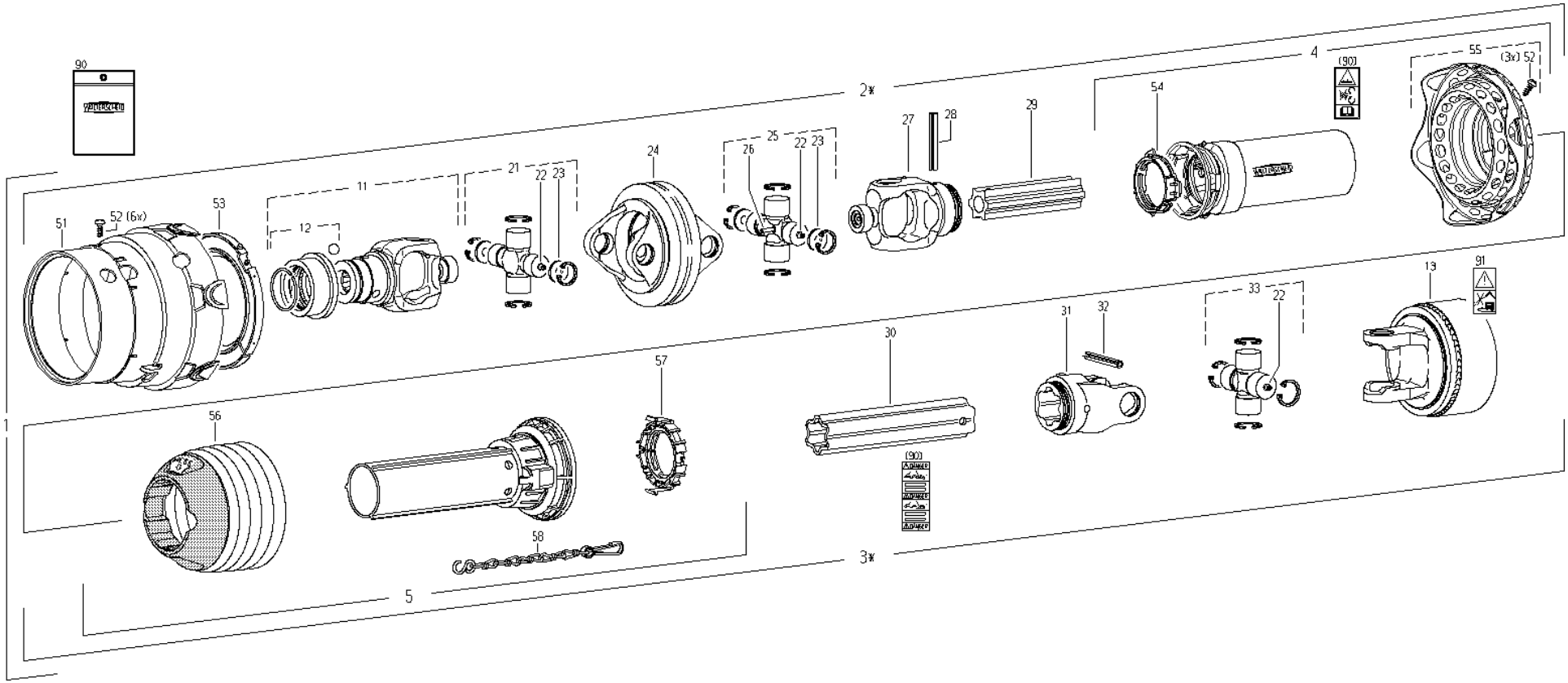

No.	Part No	Description	Qty
1	CMT00230	PTO SHAFT P580 FUSION2 +2011	1
2	CMT00255	PTO SHAFT TRACTOR HALF P580 2011	1
3	CMT00256	PTO SHAFT BALER HALF P580 2011	1
4	CMT00231	PTO GUARD TRACTOR SIDE	1
5	CMT00232	PTO GUARD BALER SIDE	1
11	CMT00233	YOKE COMPLETE HD PTO *WITH STD METAL PULL RING*	1
11	CMT00338	YOKE COMPLETE HD PTO QS *WITH BLACK PLASTIC QS AUTO SNAP RING*	1
12	CMT00212	KIT QUICK RELEASE HD PTO *STD METAL PULL RING*	1
12	CMT00337	KIT QUICK RELEASE HD PTO QS *BLACK PLASTIC QS AUTO SNAP RING*	1
13	CMT00213	CLUTCH CAM TYPE	1
13a	CMT00471	SPRING PACK CLUTCH 2200NM K64/24	1
13b	CMT00158	CLAMP PIN BALER PTO SHAFT 7540 *BOLT-PIN TO SECURE PTO SHAFT TO PTO STUB ON MACHINE GEARBOX*	1
21	CMT00235	UNIVERSAL JOINT WIDE ANGLE	2
22	CFA00097	GREASE NIPPLE	3
23	CMT00215	PLATE DIA. 31.95X2	4
24	CMT00234	PTO DOUBLE YOKE	1
25	CMT00236	UNIVERSAL JOINT WIDE ANGLE	1
26	CMT00237	LUBRICATION FITTING	1
27	CMT00238	PTO YOKE	1
28	CFA00629	SPLIT PIN 10X80	1
29	CMT00218	PROFILE TUBE INNER	1
30	CMT00219	PROFILE TUBE OUTER PWE580 STAR *REPLACES CMT00239*	1
31	CMT00220	YOKE PTO	1
32	CFA00871	ROLL PIN 10X90	1
33	CMT00240	PTO UNIVERSAL JOINT	1
51	CMT00222	GUARD CONE	1
52	CFA00630	SCREW M4X10 FUSION PTO	9
53	CMT00170	BEARING RING PTO FUSION	1
54	CMT00095	BEARING RING SMALL FUSION PTO	1
55	CMT00189	FLEXIBLE GUARD CONE	1
56	CMT00241	PTO GUARD CONE	1
57	CMT00242	PTO GUARD RING	1
58	CCH00046	SAFETY CHAIN 4OOMM FUSION PTO	1
90	CLT00326	PTO PWE580 INSTRUCTION MANUAL	1
91	CST00133	DECAL NO HIGH PRESSURE CLEANER	1

No.	Part No	Description	Qty

Gearbox 1 (831)

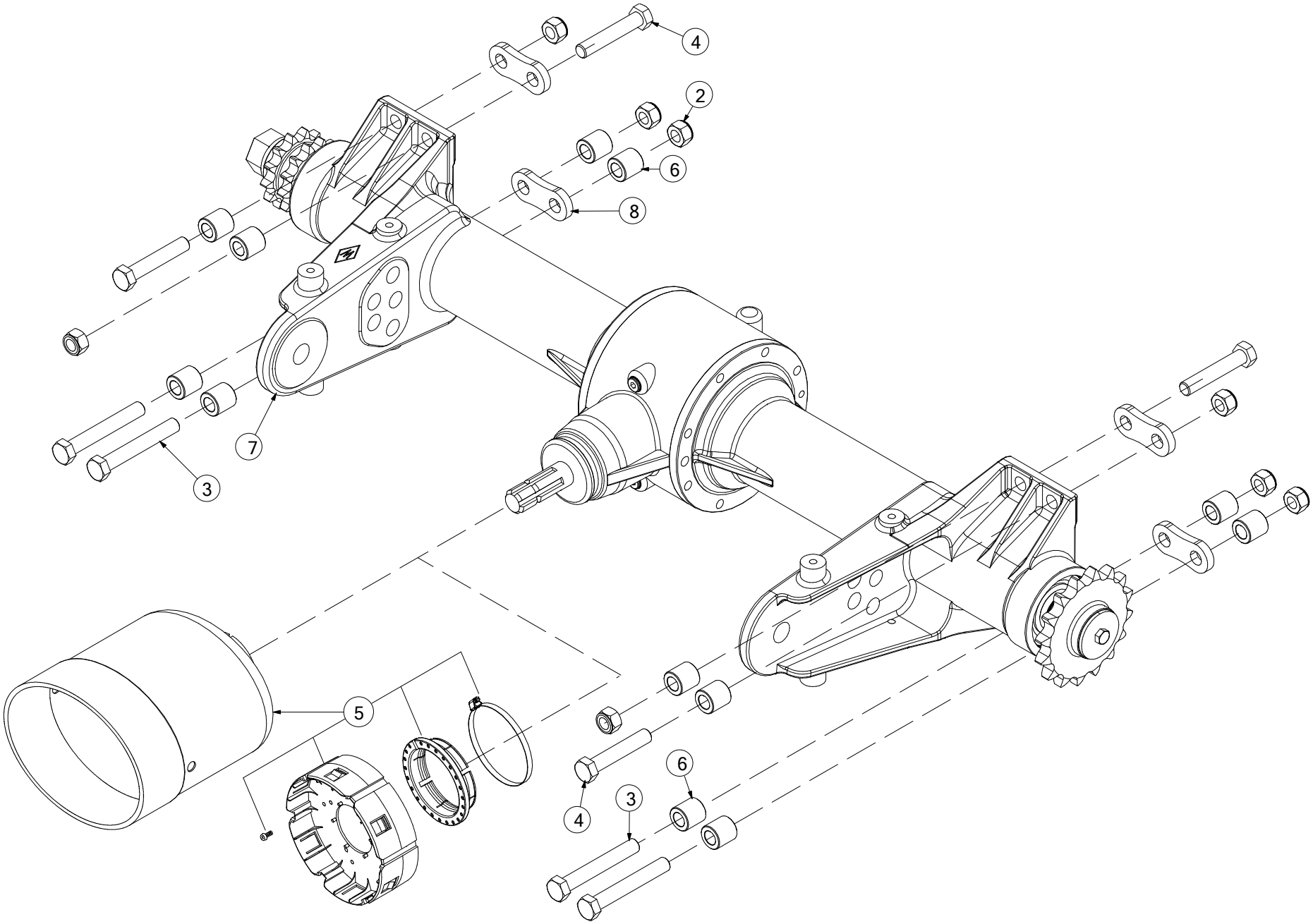

No.	Part No	Description	Qty
2	CFA00418	NUT M20X1.5 NYLOC FINE GRADE 10.0	8
2a	CFA02223	WASHER M20 DIN6916 GALV HV PEINER *USED ON FUSION VARIO ONLY*	16
3	CFA00663	BOLT M20X220 FINE 10.9 SC *USED ON FUSION VARIO ONLY*	4
3	CFA00785	BOLT M20X140 FINE 10.9 SC *USED ON FUSION 3 & FUSION 3 PLUS*	4
4	CFA00894	BOLT M20X160X1.5 10.9 BLACK *USED ON FUSION VARIO ONLY*	4
4	CFA02224	BOLT M20X110X1.5 10.9 BLACK *USED ON FUSION 3 & FUSION 3 PLUS*	4
5	CGD00037	GUARD WALTERSCHEID GEARBOX *OVAL SHIELD USED ON FUSION 3 SERIES UP TO SERIAL No 662276 & FUSION VARIO UP TO SERIAL No 900211*	1
5	CMT00395	PTO SHAFT GEARBOX ADAPTOR RING ASM *ADAPTER ASM USED ON FUSION 3 SERIES FROM SERIAL No 662277 & FUSION VARIO FROM SERIAL No 900212*	1
6	CMH01118	BUSH 20.5X35X35 Z/P	12
7	CMT00166	GEARBOX BALER 540 RPM W-SCHEID	1
7	CMT00498	GEARBOX 1000RPM HEAVY DUTY *OPTIONAL*	1
8	CMH01486	WEDGE PLATE GEARBOX MOUNT *USED ON FUSION VARIO ONLY*	4
8	CZI02039	12MM L CHASSIS PART FUSION *USED ON FUSION 3 & FUSION 3 PLUS*	4

No.	Part No	Description	Qty

Gearbox 2 (490)

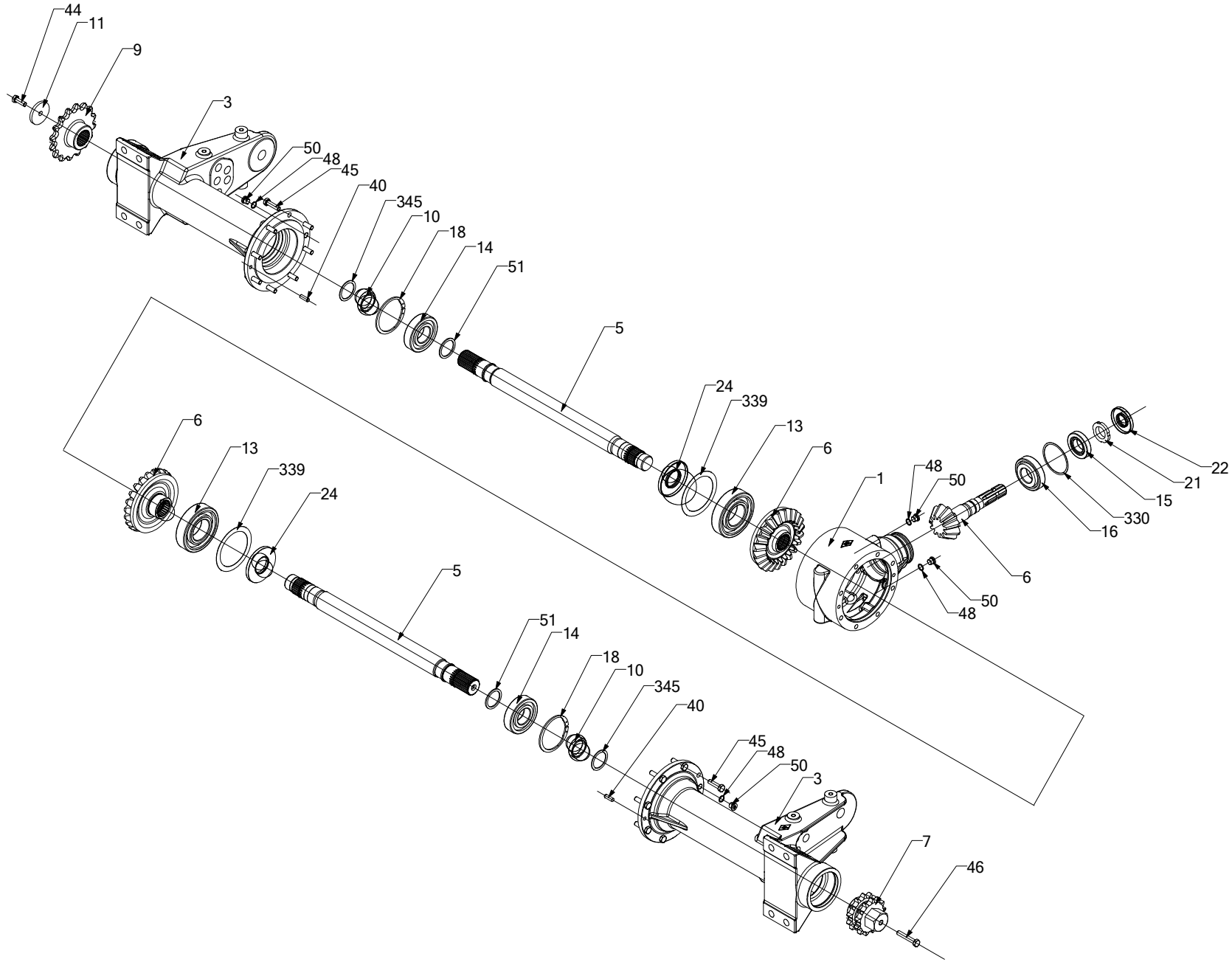

No.	Part No	Description	Qty
0	CMT00166	GEARBOX COMPLETE WALTERSCHEID	1
1	CMT00100	GEAR CASE	1
UP TO SERIAL NO. 654807			
1	CMT00245	GEAR CASE	1
FROM SERIAL NO. 654808			
3	CMT00187	BEARING HOUSING	2
UP TO SERIAL NO. 654807			
3	CMT00246	BEARING HOUSING	2
FROM SERIAL NO. 654808			
5	CMH00901	REPLACEMENT SHAFT COMPLETE KIT	2
UP TO SERIAL NO. 654807			
5	CMH02505	SHAFT	2
FROM SERIAL NO. 654808			
6	CMH00902	GEAR SET CROWN+PINION FUSION WALT.	1
UP TO SERIAL NO. 654807			
6	CMH02461	BEVEL GEAR PAIR AND PINION KIT	1
FROM SERIAL NO. 654808			
7	CMH02535	SPROCKET 13T DUPLEX	1
9	CMH02531	SPROCKET 1 1/4 16T 50MM SPLINE	1
USED ON FUSION 2, FUSION 3 & FUSION 3 PLUS			
9	CMH02317	SPROCKET 1 1/4 17T 50MM SPLINE	1
USED ON FUSION VARIO ONLY			
10	CMH00810	BUSH 45X55X18	2
11	CZE00115	BALE SPLITTER WASHER	1
13	CBR00114	BEARING 6213 C3	2
UP TO SERIAL NO. 654807			
13	CBR00296	BEARING 6313 C3	2
FROM SERIAL NO. 654808			
14	CBR00113	BEARING 6310 2RSR	2
15	CBR00115	BEARING 30208A	1
16	CBR00116	BEARING 30309A	1
18	CFA00652	CIRCLIP 110X4	2
21	CFA00653	NUT M40X1.5	1
22	CSE00132	RADAIL SEAL 35X80X10	1
24	CSE00133	RADAIL SEAL 50X90X10	2
UP TO SERIAL NO. 654807			
24	CSE00162	SEAL RADIAL 50X110X10	2
FROM SERIAL NO. 654808			
40	CFA00662	CYLINDRICAL DOWEL M6X32	2
44	CFA00033	SETSCREW M12X35 Z/P	1
45	CFA00065	SETSCREW M12X45 Z/P	16
46	CFA00036	SETSCREW M12X70 Z/P	1
48	CSE00127	SEAL O-RING COPPER GEARBOX FSN	4
50	CMT00073	DRAIN PLUG GEARBOX FUSION	4
51	CMH00903	BUSH	2
UP TO SERIAL NO. 654807			
51	CMH02460	SPACER RING 50X62X3 DIN988	2
FROM SERIAL NO. 654808			
330	CFA00654	SHIM 90X100X0.1	2
330	CFA00655	SHIM 90X100X0.3	1
330	CFA00656	SHIM 90X100X0.5	1
330	CFA00657	SHIM 90X100X1.0	1

No.	Part No	Description	Qty
330	CFA02237	SHIM 90X100X0.15	1
339	CFA00658	SHIM 110X120X0.1	2
UP TO SERIAL NO. 654807			
339	CFA00659	SHIM 110X120X0.3	2
UP TO SERIAL NO. 654807			
339	CFA00660	SHIM 110X120X0.5	2
UP TO SERIAL NO. 654807			
339	CFA00661	SHIM 110X120X0.5	1
UP TO SERIAL NO. 654807			
339	CFA02238	SHIM 110X120X0.15	2
UP TO SERIAL NO. 654807			
339	CFA00888	SHIM 110X140X0.1	2
FROM SERIAL NO. 654808			
339	CFA00889	SHIM 110X140X0.3	2
FROM SERIAL NO. 654808			
339	CFA00890	SHIM 110X140X0.5	2
FROM SERIAL NO. 654808			
339	CFA00891	SHIM 110X140X1.0	1
FROM SERIAL NO. 654808			
345	CFA02239	SHIM 50X62X2.0	2
400	REP00025	GEARBOX REPAIR KIT	1
UP TO SERIAL NO. 654807			
500	REP00059	GEARBOX REPAIR KIT	1
FROM SERIAL NO. 654808			

Drawbar (952)

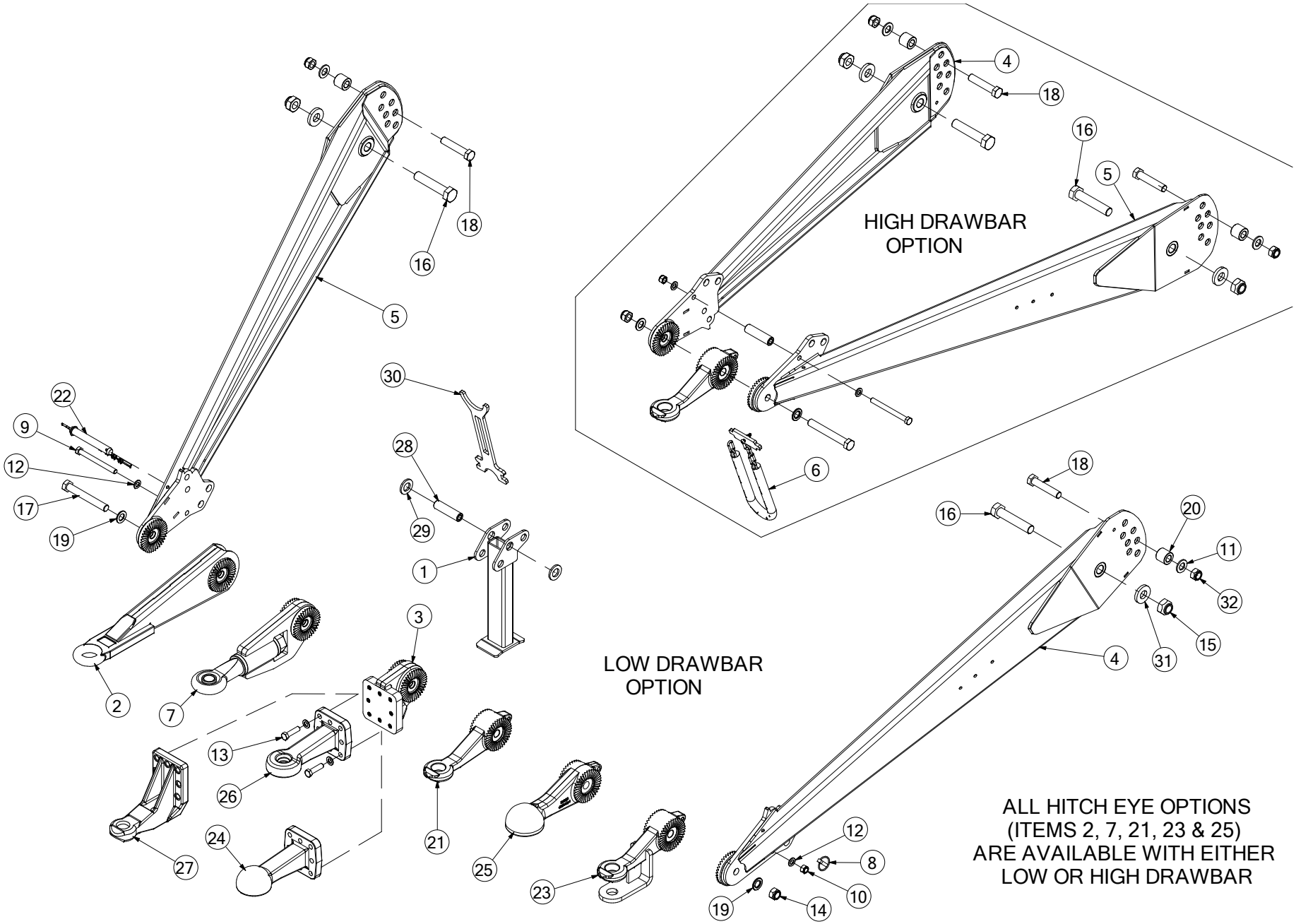
HIGH DRAWBAR
OPTION
LOW DRAWBAR
OPTION
ALL HITCH EYE OPTIONS
(ITEMS 2, 7, 21, 23 & 25)
ARE AVAILABLE WITH EITHER
LOW OR HIGH DRAWBAR
1
2
3
4
5
6
7
8
9
10
11
12
13
14
15
16
17
18
19
20
21
22
23
24
25
26
27
28
29
30
31
32

No.	Part No	Description	Qty
0	ABD00140	DRAWBAR COMPLETE ASSEMBLY HD *INCLUDES STANDARD HITCH EYE ITEM 21*	1
1	ADB00068	DRAWBAR STAND SWIVEL STANDARD	1
2	ADB00083	HITCH EYE 600MM CTR (NORWAY) *OPTIONAL*	1
3	ADB00095	GERMAN COUPLING ADAPTOR 8-HOLE *NO LONGER AVAILABLE*	1
4	ADB00141	DRAWBAR WELD (LEFT) FUSION *STANDARD DRAWBAR LH*	1
4	ADB00204	DRAWBAR WELD (LONG) LEFT FUSION *LONG DRAWBAR LH USED WITH BALL COUPLING (ITEM 25) ONLY*	1
5	ADB00142	DRAWBAR WELD (RIGHT) FUSION *STANDARD DRAWBAR RH*	1
5	ADB00205	DRAWBAR WELD (LONG) RIGHT FUSION *LONG DRAWBAR RH USED WITH BALL COUPLING (ITEM 25) ONLY*	1
6	ADB00163	HIGH DRAWBAR PTO HOLDER *PTO HOLDER FOR HIGH DRAWBAR OPTION ONLY (REPLACES ADB00100)*	1
7	ADB00174	HITCH EYE SWIVEL 50MM FUSION 3 *OPTIONAL*	1
8	CFA00005	LINCH PIN 10MM	1
9	CFA00061	BOLT M16X170 ZP DIN931 8.8 Z/P	1
10	CFA00128	NUT M16 NYLOC	1
11	CFA00135	WASHER FLAT 1" Z/P	2
12	CFA00140	WASHER FLAT 16MM Z/P	10
13	CFA00409	BOLT M16 X 60 Z/P	8
14	CFA00130	NUT M24 STD NYLOC Z/P	1
15	CFA00420	NUT M30X2 NYLOC DIN985 8.8 Z/P	2
16	CFA00522	BOLT M30X2X150 DIN960 10.9 Z/P	2
17	CFA00795	BOLT M24X3X180 STD GRADE 8.8 Z/P	1
18	CFA00748	BOLT M24X2X120 DIN960 10.9 Z/P	2
19	CFA00796	WASHER PEINER M24 GALV DIN6916	2
20	CMH01005	BUSH 44.45X20X40	2
20	CMH01950	BUSH 25X60 STEPPED 45 *ECCENTRIC BUSH USED WITH LONG DRAWBAR/BALL COUPLING OPTION ONLY*	2
21	ADB00150	HITCH EYE COUPLING RING STD Ø40 *STANDARD HITCH EYE (ADB00150 IS A DIRECT REPLACEMENT FOR CTP00092 & CTP00317)*	1
22	CTP00265	PIN HITCH 1" BALER DRAWBAR	1
23	CTP00274	HITCH EYE AMERICIAN BALER *OPTIONAL*	1
24	CTP00292	COUPLING HEAD BALL K80-3192 8H *NO LONGER AVAILABLE - ORDER ADB00198 (ITEM 25)*	1
25	ADB00198	K80 ISO24347 BALL COUPLER SPOON *OPTIONAL*	1
26	CTP00367	HITCH EYE 100X110 DIN11026 40Ø *NO LONGER AVAILABLE - ORDER ADB00150 (ITEM 21)*	1
27	CTP00469	HITCH EYE_00.652.50.1-A02_DIN11026 *NO LONGER AVAILABLE - ORDER ADB00150 (ITEM 21)*	1
27a	CFA02275	SETSCREW M16X60 SOC CAP 10.9 Z/P *USED IN BOTTOM CENTRE HOLE*	1
27b	CFA00783	WASHER NL16 NORD-LOCK *USED IN BOTTOM CENTRE HOLE*	1
28	CXT00419	BUSHING C030X7X112	1

No.	Part No	Description	Qty
29	CZF04263	6MM L DRAWBAR WASHER Z/P	2
30	CZH02914	10MM L PTO SUPPORT STAND BALER *PTO HOLDER FOR LOW DRAWBAR OPTION ONLY*	1
31	CZH04335	10MM L WASHER 30X65X10 Z/P	2
32	CFA00419	NUT M24X2 NYLOC DIN985 8.8 Z/P	2

Screw jack & Handbrake (812)

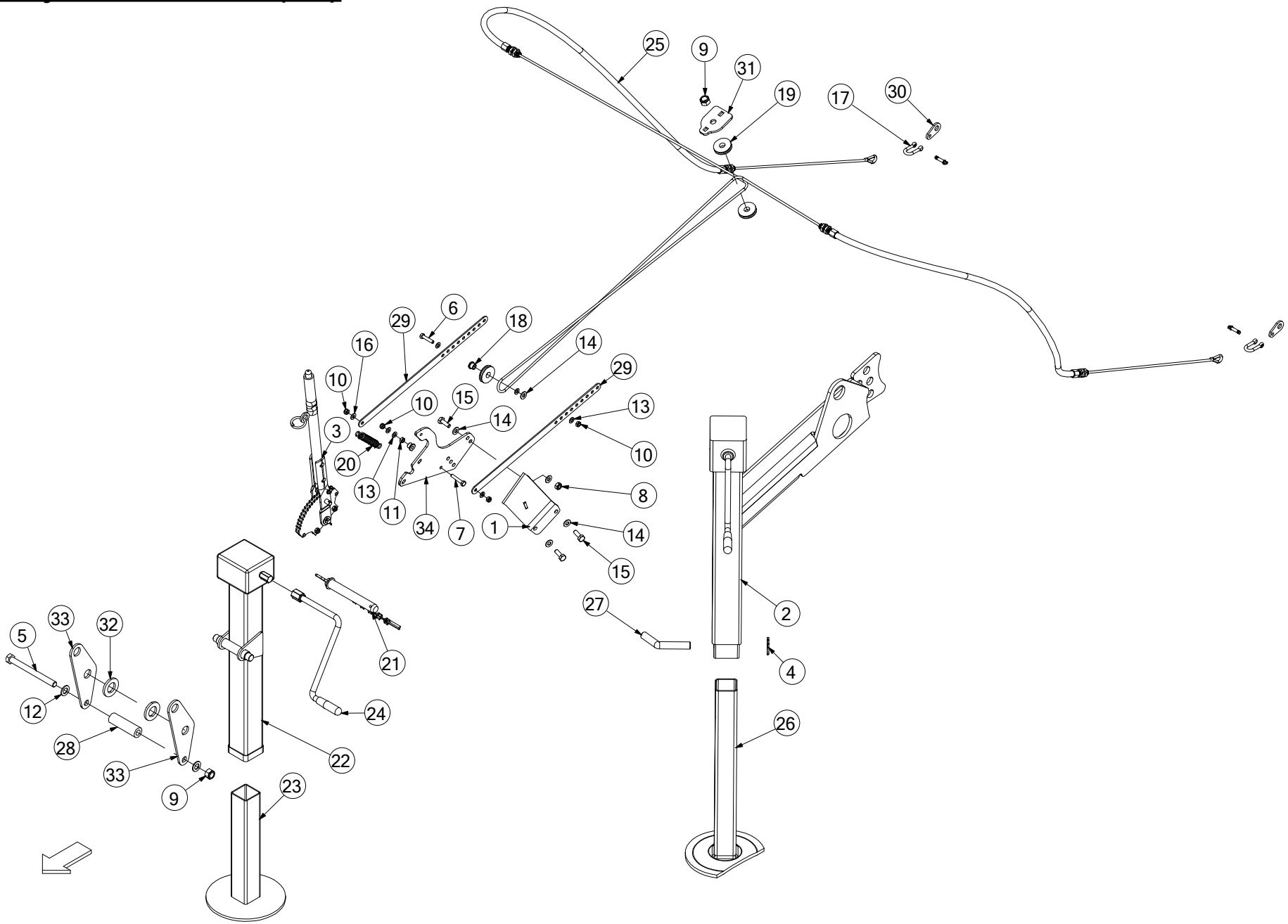

No.	Part No	Description	Qty
1	ADB00120	HANDBRAKE LEVER BRACKET	1
2	ADB00158	SCREW TYPE JACK STD FUSION *HIGH HITCH STAND (INCLUDES ITEMS 4, 26 & 27)*	1
2a	KST00090	HIGHSTAND BEVEL GEAR REPLACEMENT KIT *SET OF REPLACEMENT BEVEL GEARS FOR HIGH HITCH STAND REPAIR*	1
3	CAX00090	HAND BRAKE LEVER *USED ON STANDARD MACHINES*	1
3	CAX00154	HAND BRAKE LEVER COMP ASSY *USED ON FRENCH MACHINES ONLY*	1
4	CFA00004	R-CLIP 4MM	1
5	CFA00061	BOLT M16X170 Z/P	1
6	CFA00100	BOLT M8X40 Z/P	1
7	CFA00106	BOLT M8X45 Z/P	1
8	CFA00123	NUT M10 NYLOC	4
9	CFA00128	NUT M16 NYLOC	2
10	CFA00132	NUT M8 NYLOC Z/P	4
11	CFA00133	NUT M8 Z/P	1
12	CFA00140	WASHER FLAT 16MM Z/P	2
13	CFA00147	WASHER FLAT 8MM Z/P	6
14	CFA00201	WASHER FLAT 10 MM Z/P	9
15	CFA00230	SETSCREW M10X30 Z/P GRADE 12.9	4
16	CFA00249	WASHER SKM8	1
17	CFA02217	D SHACKLE 0.5T Z/P	2
18	CMH00742	BUSH 8X20X13 ZINC PLATED	2
19	CMH01186	PULLEY 50X10X16 6MM ROPE	3
20	CSG00211	SRING COIL 3 X 19 X 135 27COILS	1
21	CTP00265	PIN HITCH 1" BALER DRAWBAR *INCLUDES CHAIN & LINCH-PIN*	1
22	ACH00708	PARKING JACK ADJ FUS F5 RANGE *LOW HITCH STAND (INCLUDES ITEM 23 & 24) REPLACES CTP00294*	1
23	CTP00296	PARKING JACK FUS F5 BOTTOM *LOW HITCH STAND LEG*	1
24	CTP00297	PARK JACK HANDLE SQUARE (RUDIFLEX) *LOW HITCH STAND ONLY (RUDIFLEX SQUARE)*	1
24	CTP00612	JACK HANDLE HEXAGONAL HEAD (KNOTT) *LOW HITCH STAND ONLY (KNOTT HEX)*	1
25	CTP00333	HANDBRAKE CABLE FUSION	1
26	CTP00384	LEG EXT PIECE PARKING JACK *HIGH HITCH STAND LEG*	1
27	CTP10002	PIN PARKING JACK BALER	1
28	CXT00502	BUSHING C030X7X100	1
29	CZC04376	3MM L FUSION HANDBRAKE	2
30	CZE00290	5MM L HAND BRAKE CABLE LINK *USED ON FRENCH MACHINES ONLY*	2
31	CZF03267	6MM L PULLEY COVER FUSION	1
32	CZF04263	6MM L DRAWBAR WASHER Z/P	2
33	CZF04979	6MM L STAND TRANSPORT BRACKET	2
34	CZF05030	6MM L HAND BRAKE LEVER BASE	1

No.	Part No	Description	Qty

Steps & platform (806)

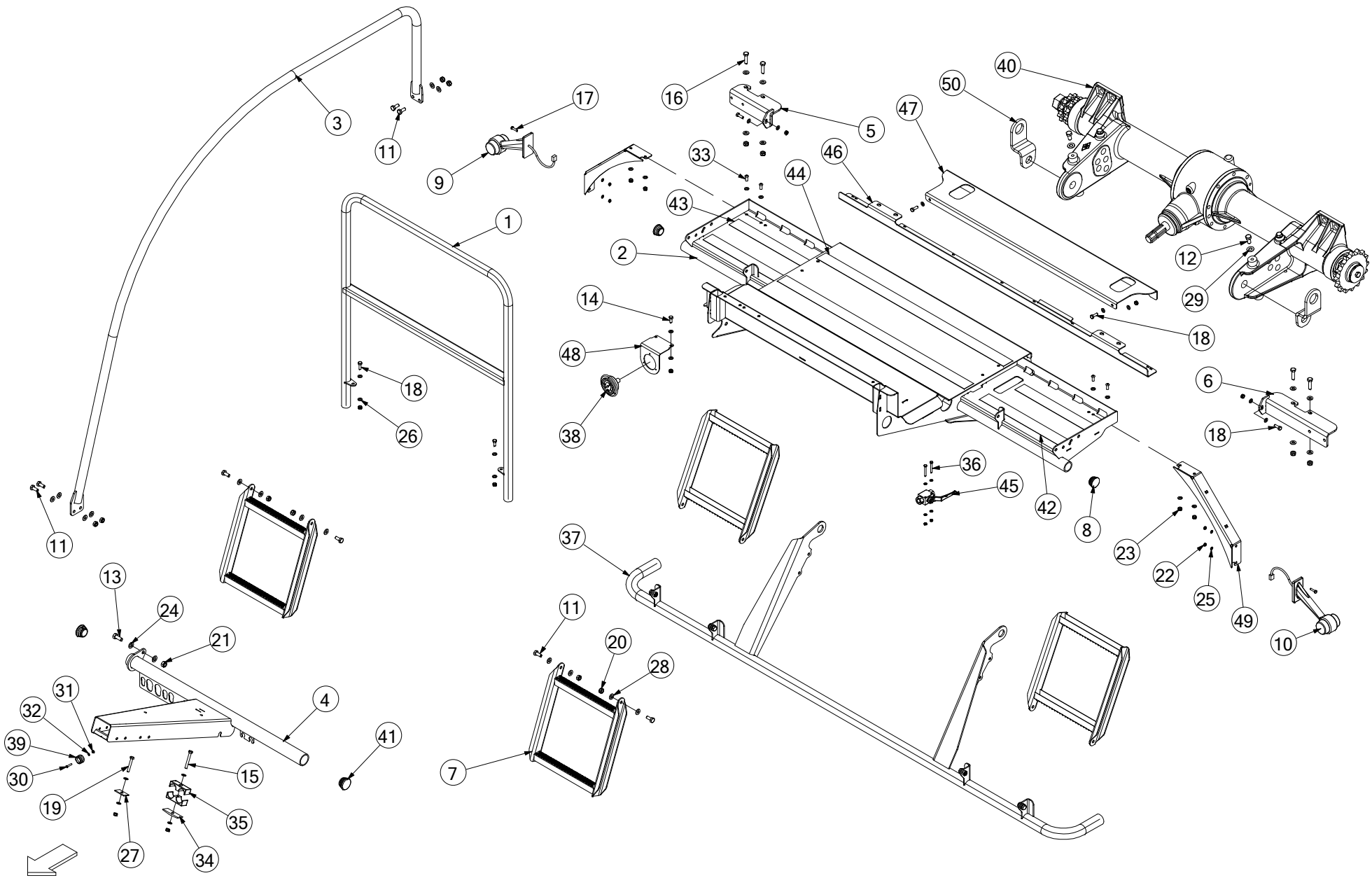

No.	Part No	Description	Qty
1	ACH01269	HAND RAIL FRONT PLATFORM	1
2	ACH02579	PLATFORM WELD ASM PLASTIC PANEL F3	1
3	ACH02578	CURVED HAND RAIL WELD ASM F3	2
4	ACN00059	HOSE TRAY FRONT FUSION II WELD ASSY	1
5	ALA00548	PLATFORM BRACKET ASSY RH FUSION 3	1
6	ALA00549	PLATFORM BRACKET ASSY LH FUSION 3	1
7	ART00349	LOWER STEP ASSEMBLY F5	4
8	CBC00005	CAP PLASTIC INSERT 42.4MM RND	2
9	CEL00842	CORNER MARKER LIGHTS RUBBER *USED UP TO SERIAL No 665426 ONLY*	1
10	CEL00843	CORNER MARKER LIGHTS RUBBER *USED UP TO SERIAL No 665426 ONLY*	1
11	CFA00025	SETSCREW M10X30 Z/P *REPLACES CFA00024*	12
12	CFA00031	SETSCREW M12X25 Z/P	4
13	CFA00032	SETSCREW M12X30 Z/P	1
14	CFA00052	SETSCREW M8X20 Z/P	2
15	CFA00056	BOLT M8X65 Z/P	1
16	CFA00071	BOLT M10X40	4
17	CFA00098	SETSCREW M6X25 Z/P *USED UP TO SERIAL No 665426 ONLY*	4
18	CFA00102	SETSCREW M8X25 Z/P	5
19	CFA00108	BOLT M8X55 Z/P	1
20	CFA00123	NUT M10 NYLOC	16
21	CFA00124	NUT M12 NYLOC	1
22	CFA00131	NUT M6 NYLOC *USED UP TO SERIAL No 665426 ONLY*	4
23	CFA00132	NUT M8 NYLOC Z/P	13
24	CFA00138	WASHER FLAT 12MM Z/P	2
25	CFA00144	WASHER FLAT 6MM Z/P *USED UP TO SERIAL No 665426 ONLY*	4
26	CFA00147	WASHER FLAT 8MM Z/P	26
27	CFA00183	HOSE CLAMP COVER PLATE 14-18	1
28	CFA00201	WASHER FLAT 10 MM Z/P	30
29	CFA00250	WASHER SKM12	4
30	CFA00261	SETSCREW M5X25 CSK HEX SS	1
31	CFA00321	NUT M5 NYLOC	3
32	CFA00337	WASHER FLAT 5MM Z/P	1
33	CFA00429	SETSCREW M8X20 BUTTON HEAD Z/P *USED UP TO SERIAL No 665426 ONLY*	4
34	CFA00584	HOSE CLAMP COVER PLATE 30MM	1
35	CFA00585	HOSE CLAMP 30MM (2 PER SET)	1
36	CFA00969	BOLT M5X45 Z/P GRADE 8.8 *REPLACES CFA00801 [M6X45]*	2
36a	CFA00320	WASHER FLAT 5MM *REPLACES CFA00144 [6MM]*	4
37	CGD00295	GUARD FRONT FUSION 3	1
38	CHY00133	GAUGE PRESSURE 63DIA FLANGE *QTY = 2 FOR NRF BARREL WRAP MACHINES*	1
39	CMH00873	BLANKING CAP QR ZP 1/2" FEMALE	1
39	CMH02599	HYD COUPLING PARKING 3/4 FEMALE/BRAKE	2

No.	Part No	Description	Qty
40	CMT00166	GEARBOX BALER 540 RPM W-SCHEID	1
40	CMT00498	GEARBOX 1000RPM HEAVY DUTY *OPTIONAL*	1
41	CPL00086	BLANKING CAP 40MM ID	2
42	CST00764	GRIP TAPE FOR PLATFORM 500MM	2
43	CST00742	GRIP STRIP PLATFORM	2
44	CST00757	GRIP TAPE FOR PLATFORM	2
45	CVA00613	VALVE 3/8 W LEVER LOCK & HOLES *REPLACES VALVE CVA00604*	1
46	CZC02317	2MM L HOSE TRAY FUSION II	1
47	CZC04654	PLATFORM EXTENSION FOR NETTER FUS 3 *STANDARD MACHINE ONLY*	1
47	CZB04403	1.5MM L PLATFORM PLATE EXT NRF *NRF BARREL WRAP MACHINES ONLY*	1
48	CZC04687	3MM PRESSURE GUAGE BRACKET FUSION 3 *STANDARD MACHINE ONLY*	1
48	CZC04723	3MM L 2 PRESSURE CLOCK BRACKET *NRF BARREL WRAP MACHINES ONLY*	1
49	CZC04737	3MM L FRONT MARKER LAMP BRACKET F3 *USED UP TO SERIAL No 665426 ONLY (REPLACES CZC04704)*	2
50	CZH03956	10MM L LIFTING EYE FUSION PLUS *REPLACES CZH03318*	2

Chassis [Up to Serial No 662265] (808)

[Excludes machines from Serial No 662001 to 662064]

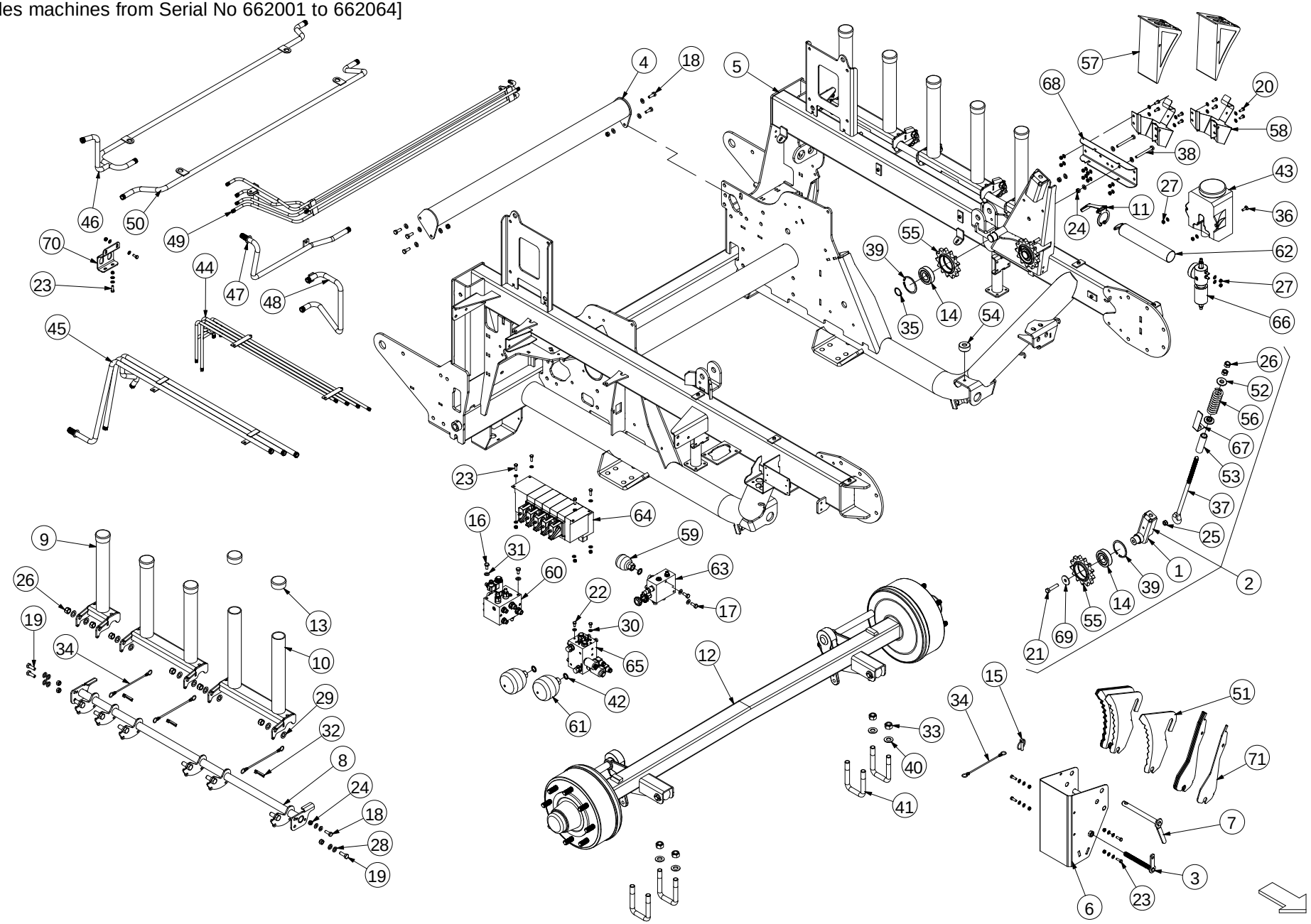

No.	Part No	Description	Qty
1	ACH00244	CHAIN TENSIONER WELD ASSY BALER	1
2	ACH00436	CHAIN TENSIONER COMP ASSY BALER	1
3	ACH00451	KNIFE HOLDER THREADED BAR ASSY	1
4	ACH00994	TRANSFER BEAM FUSION	1
5	ACH02550	CHASSIS FUSION 3 PLASTIC PANELS	1
6	ACH02564	SPARE KNIFE BRACKET FUS 3	1
7	ACH02593	PIN ASSEMBLY 20MM SPARE KNIFE HOLDER	1
8	ACH02610	SPARE FILM ROLL HOLDER	2
9	ADP00262	SPARE FILM HOLDER SINGLE	2
10	ADP00275	FILM ROLLER HOLDER WELD ASSY	4
11	ART00351	GREASE GUN STOP ASSY	1
12	CAX00096	AXLE 80MM FUSION 300X90 HYD BRAKE	1
13	CBC00007	CAP BLACK PLASTIC 2.3/8 OSF	10
14	CBR00294	BEARING 6307 2RS	3
15	CFA00005	LINCH PIN 10MM	1
16	CFA00023	SETSCREW M10X20 Z/P	2
17	CFA00024	SETSCREW M10X25 Z/P	2
18	CFA00025	SETSCREW M10X30	10
19	CFA00033	SETSCREW M12X35 Z/P	8
20	CFA00052	SETSCREW M8X20 Z/P	10
21	CFA00076	BOLT M12X60 Z/P	1
22	CFA00101	SETSCREW M8X16 Z/P	2
23	CFA00102	SETSCREW M8X25 Z/P	10
24	CFA00123	NUT M10 NYLOC	12
25	CFA00124	NUT M12 NYLOC	9
26	CFA00128	NUT M16 NYLOC	13
27	CFA00132	NUT M8 NYLOC Z/P	24
28	CFA00138	WASHER FLAT 12MM Z/P	16
29	CFA00140	WASHER FLAT 16MM Z/P	24
30	CFA00147	WASHER FLAT 8MM Z/P	45
31	CFA00201	WASHER FLAT 10 MM Z/P	28
32	CFA00202	LINCH PIN 6MM	6
33	CFA00418	NUT M20X1.5 NYLOC FINE GRD 10	12
34	CFA00476	RUBBER STRAP 240 MM	7
35	CFA00514	CIRCLIP 35MM EXTERNAL	2
36	CFA00591	BOLT M8X25 CUP SQ Z/P	2
37	CFA00672	EYE BOLT 16MM SPRING TENSIONER	1
38	CFA00850	BOLT M10X100 8.8 DIN931 ZP	2
39	CFA00882	CIRCLIP 80MM INTERNAL DIN 472	3
40	CFA02223	WASHER M20 DIN6916 GALV HV PEINER	12
41	CFA02240	U-BOLT M20X1.5X101X130	6
41	CFA02302	U-BOLT M20X1.5X101X150	6
USED WITH 710 WHEELS ONLY ALONG WITH 20MM AXLE PLATES (CZL02042)			
41	CFA00663	BOLT M20X220 FINE 10.9 SC	8
USED ON KOREAN MACHINES ONLY ALONG WITH 20MM AXLE PLATES (CZL02032)			
42	CHY00053	WASHER DOWTY 1/2"	3
43	CHY00213	OIL RESERVOIR HIGH CAPACITY	1
44	CHY00411	1/4" STEEL PIPE ASSY FUSION3 WELD	1
45	CHY02930	STEEL PIPE ASSY 1/2" WELD FUSION3 CT	1

No.	Part No	Description	Qty
(REPLACES CHY00418) FOR MACHINES PRIOR TO SERIAL No 659111 ALSO ORDER FLEX HOSE EXTENSION CHY02944			
46	CHY00896	STEEL PIPE FUSION	1
47	CHY00911	STL PIPING RIGHT CHASSIS	1
48	CHY00912	STL PIPING BACK CHASSIS	1
49	CHY00916	STL PIPING CROSS CHASSIS	1
50	CHY00928	ASSY STL PIPE FUSION	1
51	CKN00014	KNIFE CHOPPER UNIT	AR
52	CMH00464	BUSH 45X17X10 STEPPED 25 Z/P	2
53	CMH00933	BUSH 20X30X105	1
54	CMH01114	DOOR STOP BOTTOM DOOR FUSION	2
55	CMH01252	SPROCKET 1 1/4 13 TOOTH	3
56	CSG00025	SPRING COMP 8.5X44.8X140X10 Z/P	1
57	CTP00075	PARKING CHOCKS BALE	2
58	CTP00076	BRACKET FOR PARKING CHOCK	2
59	CVA00379	ACCUMULATOR 0.16L 75 BAR	1
60	CVA00416	VALVE ASY ROTATION TIP FUSION	1
USED ON FUSION 3 PLUS MACHINES ONLY FROM SERIAL No 659744			
60	CVA00157	VALVE ASY ROTATION &TIP FUSION	1
USED ON FUSION 3 PLUS MACHINES UP TO SERIAL No 659743			
61	CVA00165	ACCUMULATOR 0.5 LITRE 25 BAR	2
62	CVA00184	GREASE GUN CARTRIDGE HOUSING	1
63	CVA00428	BALER DOOR VALVE C/W OVERCENTRE	1
USED ON FUSION 3 PLUS MACHINES ONLY FROM SERIAL No 659744			
63	CVA00239	LOAD SENSING RELIEF 2004 MODEL	1
USED ON FUSION 3 PLUS MACHINES UP TO SERIAL No 659743			
64	CVA00299	VALVE CTL 5 BANK FUSION DPC130	1
USED ON STANDARD FUSION 3 MACHINE ONLY			
64	CVA00406	DPC130 6 BANK FUS 3 PLUS-VARIO	1
USED ON FUSION 3 PLUS MACHINES ONLY FROM SERIAL No 659744			
64	CVA00373	DPC130 6 BANK FUSION 3 PLUS	1
USED ON FUSION 3 PLUS MACHINES ONLY UP TO SERIAL No 659743			
65	CVA00345	VALVE 2 KNIFE OPTION CTRL	1
SELECTABLE KNIFE OPTION			
65	CVA00351	VALVE KNIFE/FLOOR CTRL FUSION	1
STANDARD KNIVES			
66	CVA00384	PUMP OIL/GREASE ALL FUSION	1
67	CZC02057	3MM L CHAIN TENSIONER	1
68	CZC04647	3MM L WHEEL CHOCK BRACKET	1
69	CZD02186	4MM L WASHER 50X13X4	1
70	CZD04670	4MM L PLATE STEEL PIPE BRACKET FUS 3	1
71	CZE00143	5MM L KNIFE BLANK BLR STANDARD	AR

Chassis [From Serial No 662266] (979)

Also includes machines from
Serial No 662001 to 662064

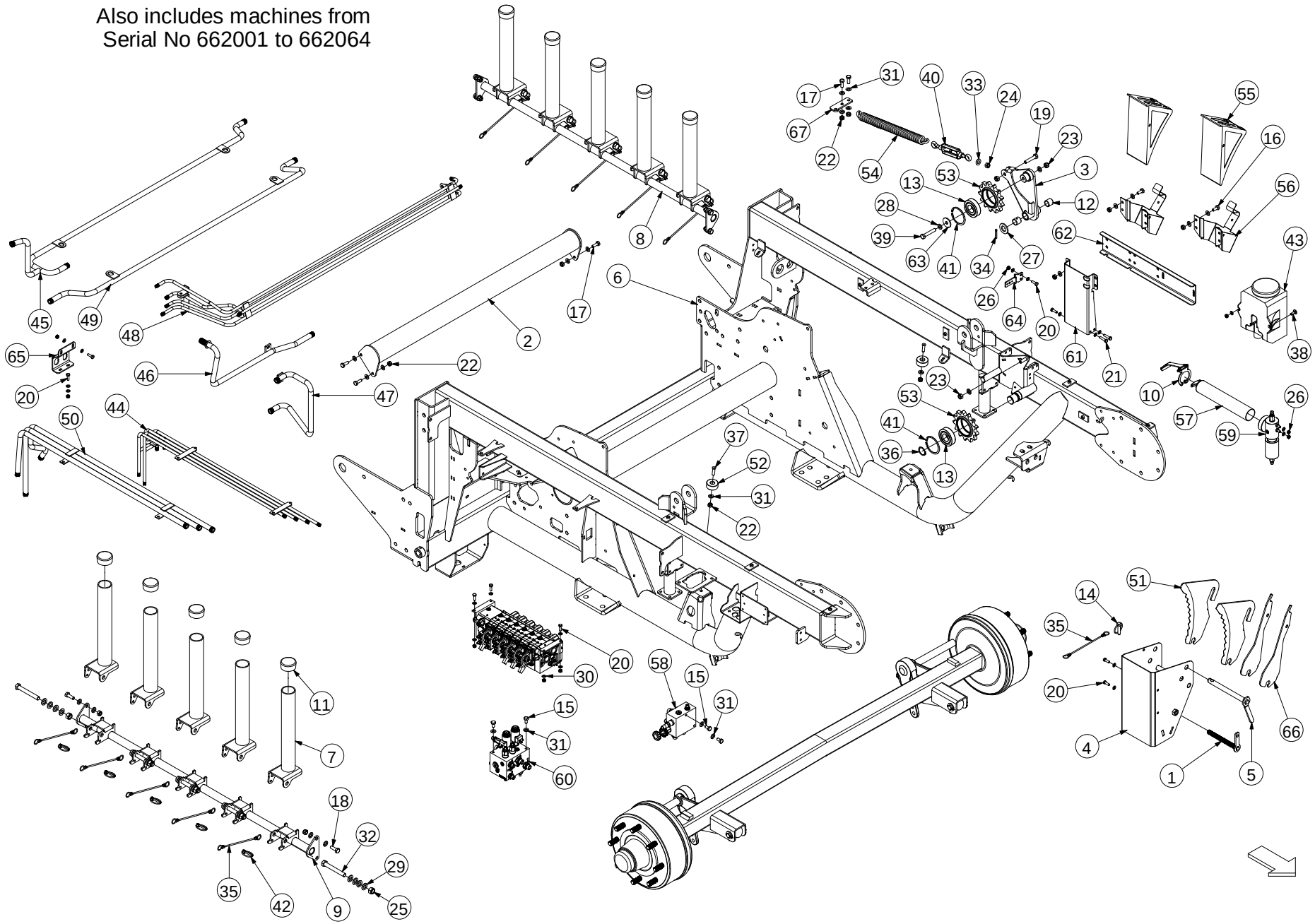

No.	Part No	Description	Qty
1	ACH00451	KNIFE HOLDER THREADED BAR ASSY	1
2	ACH00994	TRANSFER BEAM FUSION	1
3	ACH01534	CHAIN TENSIONER WELD ASSY FUSION 3	1
4	ACH02564	SPARE KNIFE BRACKET FUS 3	1
5	ACH02593	PIN ASSEMBLY 20MM SPARE KNIFE HOLDER	1
6	ACH02819	CHASSIS FUSION 3 CT	1
7	ADP00299	SPARE FILM ROLL HOLDER TOP WELD ASSY	10
8	ADP00300	SPARE FILM ROLL HOLDER COMPLETE ASSEMBLEY FUSION CT	2
INCLUDES ITEMS 7, 9, 11, 18, 25, 29, 32, 35 & 42			
9	ADP00301	SPARE FILM ROLL HOLDER BOTTOM WELD ASSY	2
10	ART00351	GREASE GUN STOP ASSY	1
11	CBC00007	CAP BLACK PLASTIC 2 3/8 OSF	10
12	CBR00039	BEARING GLACIER PM 2525 DX	2
13	CBR00294	BEARING 6307 2RS	2
14	CFA00005	LINCH PIN 10MM	1
15	CFA00023	SETSCREW M10X20 Z/P	4
16	CFA00024	SETSCREW M10X25 Z/P	8
17	CFA00025	SETSCREW M10X30	6
18	CFA00033	SETSCREW M12X35 Z/P	8
19	CFA00076	BOLT M12X60 Z/P	1
20	CFA00102	SETSCREW M8X25 Z/P	16
21	CFA00107	SETSCREW M8X35 ZP	2
22	CFA00123	NUT M10 NYLOC	16
23	CFA00124	NUT M12 NYLOC	11
24	CFA00125	NUT M12 Z/P	1
25	CFA00128	NUT M16 NYLOC	10
26	CFA00132	NUT M8 NYLOC Z/P	18
27	CFA00135	WASHER FLAT 1" Z/P	1
28	CFA00138	WASHER FLAT 12MM Z/P	19
29	CFA00140	WASHER FLAT 16MM Z/P	40
30	CFA00147	WASHER FLAT 8MM Z/P	36
31	CFA00201	WASHER FLAT 10 MM Z/P	34
32	CFA00209	BOLT M16X120 Z/P	10
33	CFA00250	WASHER SKM12	1
34	CFA00475	SPLIT PIN 5X40 Z/P	1
35	CFA00476	RUBBER STRAP 240 MM	11
36	CFA00514	CIRCLIP 35MM EXTERNAL	1
37	CFA00540	SETSCREW M10X35 CSK HEX ZP	2
38	CFA00591	BOLT M8X25 CUP SQ Z/P	2
39	CFA00592	BOLT M12X70 ZP	1
40	CFA00774	TURNBUCKLE EYE 12MM	1
41	CFA00882	CIRCLIP 52MM INTERNAL DIN 472	2
42	CFA01036	LINCH PIN 8MM	10
43	CHY00213	OIL RESERVOIR HIGH CAPACITY	1
44	CHY00411	1/4 STEEL PIPE ASSY FUSION3 WELD	1
45	CHY00896	STEEL PIPE FUSION BACK MOTORS	1
46	CHY00911	STEEL PIPING RIGHT CHASSIS FUS	1
47	CHY00912	STEEL PIPING BACK CHASSIS FUSN	1
48	CHY00916	STEEL PIPING CROSS CHASSIS FUS	1

No.	Part No	Description	Qty
49	CHY00928	STEEL PIPING BACK CHASSIS FUSN	1
50	CHY02930	STEEL PIPE ASSY 1/2 WELD FUSION3 CT	1
51	CKN00014	KNIFE CHOPPER UNIT STD (LONG)	AR
52	CMH01114	DOOR STOP BOTTOM DOOR FUSION	2
53	CMH01252	SPROCKET 1 1/4" 13 TOOTH	2
54	CSG00206	SPRING EXT 7X36 OD X375	1
55	CTP00075	PARKING CHOCKS BALE	2
56	CTP00076	BRACKET FOR PARKING CHOCK	2
57	CVA00184	GREASE GUN CATRAGE HOUSING	1
58	CVA00239	LOAD SENSING RELIEF 2004 MODEL	1
59	CVA00384	PUMP OIL/GREASE ALL FUSION	1
60	CVA00416	VALVE ASY ROTATION TIP FUSION	1
61	CZC02586	3MM WHEEL CHOCK BRACKET PART	1
62	CZC02587	3MM WHEEL CHOCK BRACKET PART	1
63	CZD02186	4MM L WASHER 50X13X4	1
64	CZD03012	4MM L OILER BRACKET FUSION 3	1
65	CZD04670	4MM L PLATE STEEL PIPE BRACKET FUS 3	1
66	CZE00143	5MM L KNIFE BLANK BLR STANDARD	AR
67	CZF06793	6MM SPRING BRACKET FUSION 3	1

Axle Hyd-brake (941)

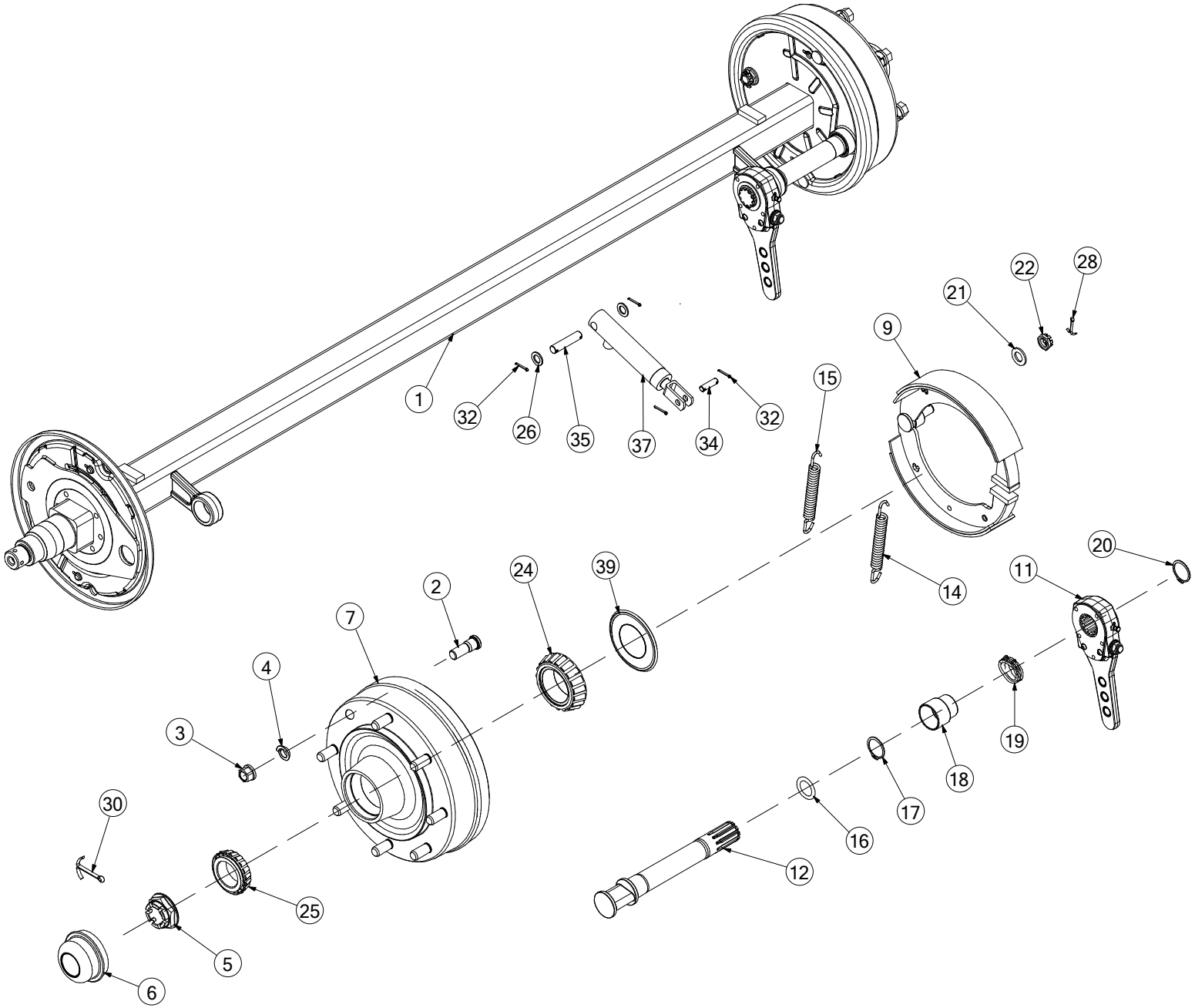

No.	Part No	Description	Qty
1	CAX00096	AXLE 80MM FUSION 300X90 HYD BRAKE *COMPLETE AXLE ASM INCLUDING ITEMS 2 THROUGH 39*	1
2	CAX00055	STUD FOR AXLE B80L030D/S	16
3	CAX00056	NUT M18X1.5X27AF AX B80L030D/S	16
4	CAX00057	WASHER 18MM AXLE B80L030D/S	16
5	CAX00059	HUB NUT (B80L030D/S) 328F014	2
6	CAX00098	HUB CAP FUSION 307F050	2
7	CAX00099	BRAKE HUB FUSION2 300X90 ASSY *INCLUDES ITEMS 2, 24, 25 & 39*	2
9	CAX00112	BRAKE SHOE ASM 300X90 CAX00096 *INCLUDES SPRINGS (ITEMS 14 & 15)*	2
11	CAX00132	ADJUSTABLE BRAKE LEVER FAD 320F082	2
12	CAX00183	CAMSHAFT CAX00096 HYD BRAKE S/N 653704 ON *USED FROM SERIAL No 653704*	2
12	CAX00199	CAMSHAFT SHORT CAX00096 HYD BRAKE UP TO S/N 653703 *USED UP TO SERIAL No 653703*	2
14	CAX00185	SPRING CAX00096 HYD BRAKE 322F005	2
15	CAX00186	SPRING CAX00096 HYD BRAKE 322F006	2
16	CAX00187	O RING CAX00096/101 BRAKE 341F069	2
17	CAX00189	CIRCLIP CAX00096 BRAKE 341F043	2
18	CAX00190	SLEEVE CAX00096/101 BRAKE 349F0341	2
19	CAX00191	SPRING CLIP CAX00096/101 BRAKE 322F046	2
20	CAX00192	CIRCLIP CAX00096/101 BRAKE 341F044	2
21	CAX00193	WASHER 17X30X1.6 CAX00096 BRAKE 329F011	2
22	CAX00194	NUT CASTLE M18X1.5 CAX00096 BRAKE 328F002	2
24	CBR00100	BEARING WHEEL 32215 FUSION *PART OF WHEEL BEARING KIT CAX00121 (ITEMS 24, 25 & 39)*	2
25	CBR00282	WHEEL BEARING 32212 *USED FROM SERIAL No 653704 (PART OF WHEEL BEARING KIT CAX00121)*	2
25	CBR00099	BEARING WHEEL 32211 FUSION *USED UP TO SERIAL No 653703 (PART OF WHEEL BEARING KIT CAX00121)*	2
26	CFA00413	WASHER FLAT 20MM ZP	4
28	CFA00322	SPLIT PIN 3X50 Z/P	2
30	CFA00410	SPLIT PIN 6X90	2
32	CFA00450	SPLIT PIN 4X36 ZP	8
34	CMH00829	PIN 14X50 &2 4.5 HOLES 344FM04	2
35	CMH00830	PIN 20X90 &2 4.5 HOLES 344FM11	2
37	CRA00100	RAM BRAKE OPERATING 998/FUSION	2
39	CSE00014	SEAL HUB 80L030D/S FUSION BRAKE *PART OF WHEEL BEARING KIT CAX00121 (ITEMS 24, 25 & 39)*	2

No.	Part No	Description	Qty

Axle Air-brake (942)

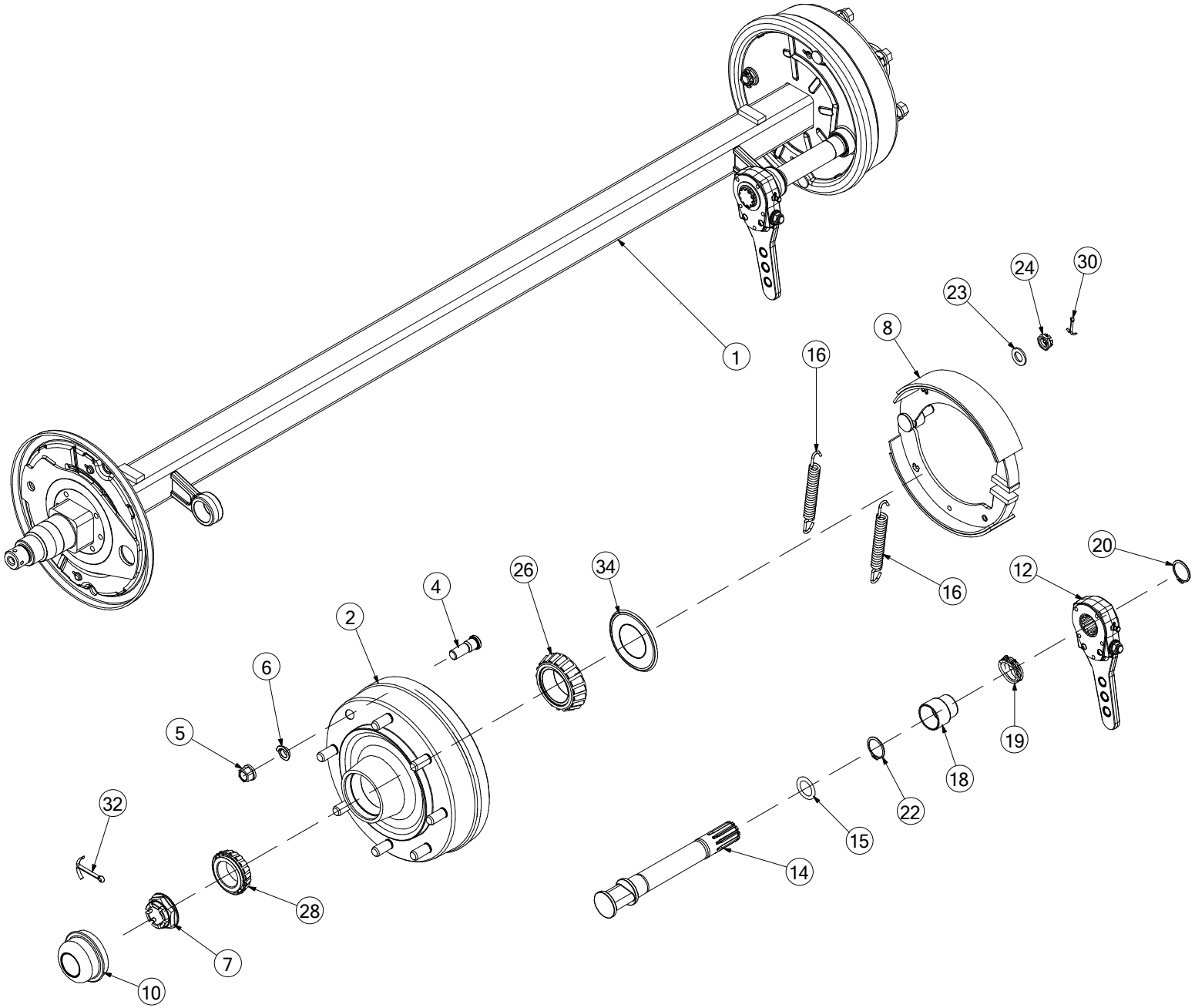

No.	Part No	Description	Qty
1	CAX00101	AXLE 80MM FUSION2 400X80 AIR BRAKE *COMPLETE AXLE ASM INCLUDING ITEMS 2 THROUGH 34*	1
2	CAX00048	BRAKE HUB AIR 32212 OUTER BRNG *INCLUDES ITEMS 4, 26, 28 & 34*	2
4	CAX00055	STUD FOR AXLE B80L030D/S	16
5	CAX00056	NUT M18X1.5X27AF AX B80L030D/S	16
6	CAX00057	WASHER 18MM AXLE B80L030D/S	16
7	CAX00059	HUB NUT (B80L030D/S) 328F014	2
8	CAX00060	BRAKE SHOE ASM 400X80 CAX00101 *INCLUDES SPRINGS (ITEMS 16)*	2
10	CAX00098	HUB CAP FUSION 307F050	2
12	CAX00132	ADJUSTABLE BRAKE LEVER FAD 320F082	2
14	CAX00184	CAMSHAFT CAX00101 AIR BRAKE S/N 653793 ON *USED FROM SERIAL No 653793*	2
14	CAX00200	CAMSHAFT SHORT CAX101 AIR BRAKE UP TO S/N 653792 *USED UP TO SERIAL No 653792*	2
15	CAX00187	O RING CAX00096/101 BRAKE 341F069	2
16	CAX00188	SPRING CAX00101 BRAKE 322F016	4
18	CAX00190	SLEEVE CAX00096/101 BRAKE 349F0341	2
19	CAX00191	SPRING CLIP CAX00096/101 BRAKE 322F046	2
20	CAX00192	CIRCLIP CAX00096/101 BRAKE 341F044	2
22	CAX00195	CIRCLIP CAX00101 BRAKE 332F009	2
23	CAX00197	WASHER 28X50X4 BRAKE CAX00101 AIR 329F012	2
24	CAX00198	NUT CROWN M27X2 BRAKE CAX00101 AIR 328F004	2
26	CBR00100	BEARING WHEEL 32215 FUSION *PART OF WHEEL BEARING KIT CAX00121 (ITEMS 26, 28 & 34)*	2
28	CBR00282	WHEEL BEARING 32212 *USED FROM SERIAL No 653704 (PART OF WHEEL BEARING KIT CAX00121)*	2
28	CBR00099	BEARING WHEEL 32211 FUSION *USED UP TO SERIAL No 653703 (PART OF WHEEL BEARING KIT CAX00121)*	2
30	CFA00021	SPLIT PIN 4X50 Z/P	2
32	CFA00410	SPLIT PIN 6X90	2
34	CSE00014	SEAL HUB 80L030D/S FUSION BRAKE *PART OF WHEEL BEARING KIT CAX00121 (ITEMS 26, 28 & 34)*	2

No.	Part No	Description	Qty

Air brake kit (818)

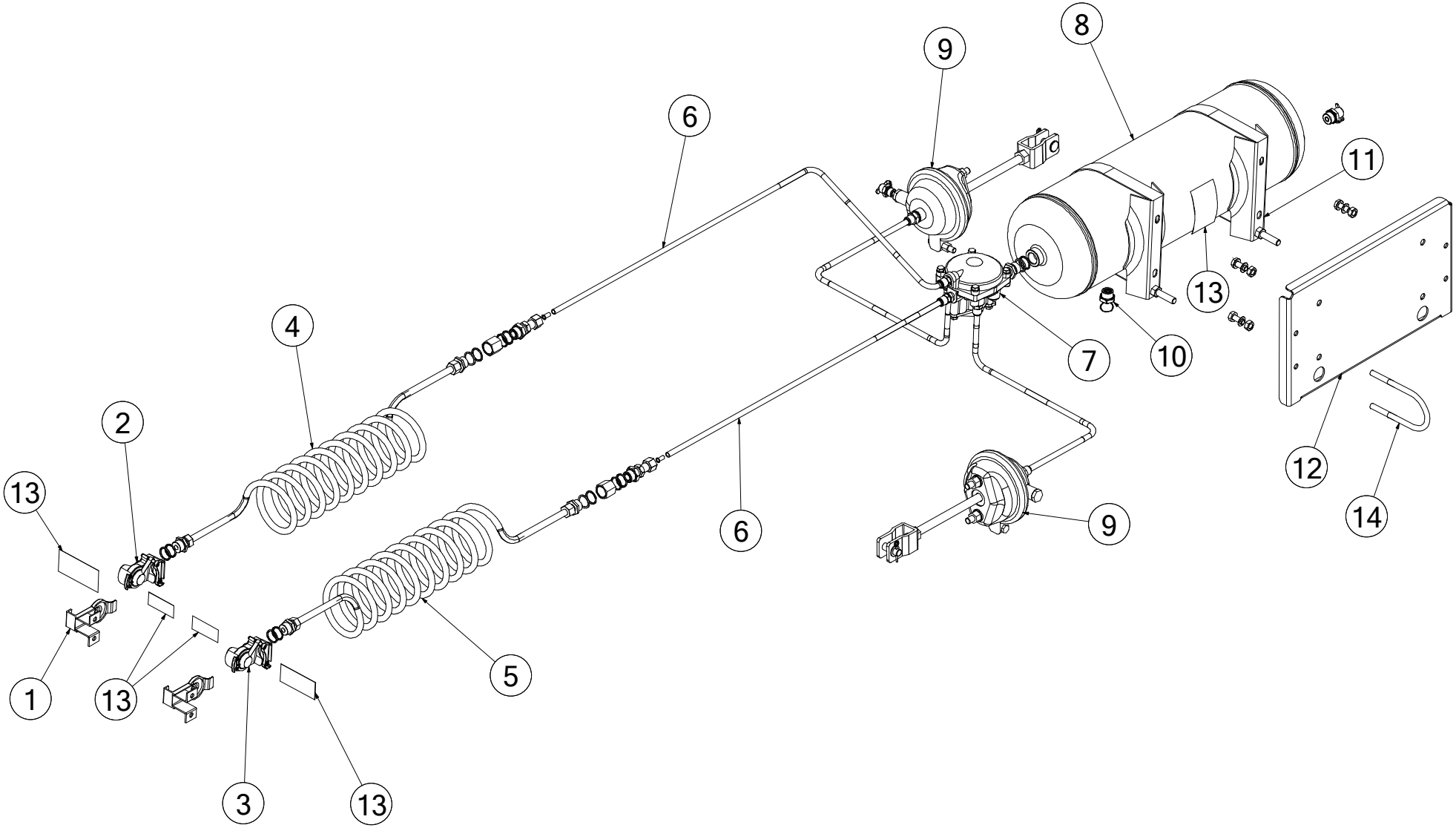

No.	Part No	Description	Qty
1	CVA00328	COUPLER BRACKET	2
2	CVA00126	PALM QUICK FIT COUPLING (YELLOW) M22	1
3	CVA00127	PALM QUICK FIT COUPLING (RED) M22	1
4	CHY02557	SERVICE SUZZIE (YELLOW)	1
4a	CVA10039	M22 THRUST WASHER TRACTAIR	3
4b	CVA10038	M22 O RING TRACTAIR	3
5	CHY02558	EMERGENCY SUZZIE (RED)	1
5a	CVA10039	M22 THRUST WASHER TRACTAIR	3
5b	CVA10038	M22 O RING TRACTAIR	3
6	CHY02559	10MM O/D NYLON AIR BRAKE HOSE	AR
6a	CVA10034	7MM INSERT TRACTAIR (10MMTUBE)	2
6b	CVA10036	M22 - M16 BULKHEAD 10MM ASMBLY	2
6c	CVA10035	M22 FEM-FEM ADAPTOR TRACTAIR	2
7	CHY02605	CONTROL VALVE AIR BRAKE KIT [TRACTAIR]	1
7a	CVA10032	1/4 TAPER 10MM ST PUSHFIT ADAPTOR	4
8	CVA10043	20LTR AIR RESERVOIR	1
TANK			
9	CVA00124	AIR BRAKE ACTUATOR TRACTAIR T12	2
FUSION 3 & FUSION 3 PLUS UP TO SERIAL No 664521 ONLY			
9	CVA00671	AIR BRAKE ACTUATOR TRACTAIR T16	2
FUSION 3 & FUSION 3 PLUS FROM SERIAL No 664522 & ALL FUSION VARIO			
9a	CVA10031	M16 10MM PUSH ADAPTOR AIR BRAKE	2
9	CVA00743	AIR HYD BRAKE ACTUATOR 12 25	2
10	CVA00327	AIR BRAKE M16 TEST POINT	1
11	CVA00325	RESERVOIR SADDLE	2
SADDLE BRACKET			
12	CZC04641	3MM L AIR BRAKE TANK BRACKET FUSION	1
MTG PLATE			
13	CST00653	DECAL KIT FOR CHY02556 AIR BRAKE KIT	1
14	CFA00952	U-BOLT M10 Z/P	2
15	CFA00201	WASHER FLAT 10 MM Z/P	12
16	CFA00123	NUT M10 NYLOC	8
17	CFA00024	SETSCREW M10X25 Z/P	4

No.	Part No	Description	Qty

Wheels & Mudguards (813)

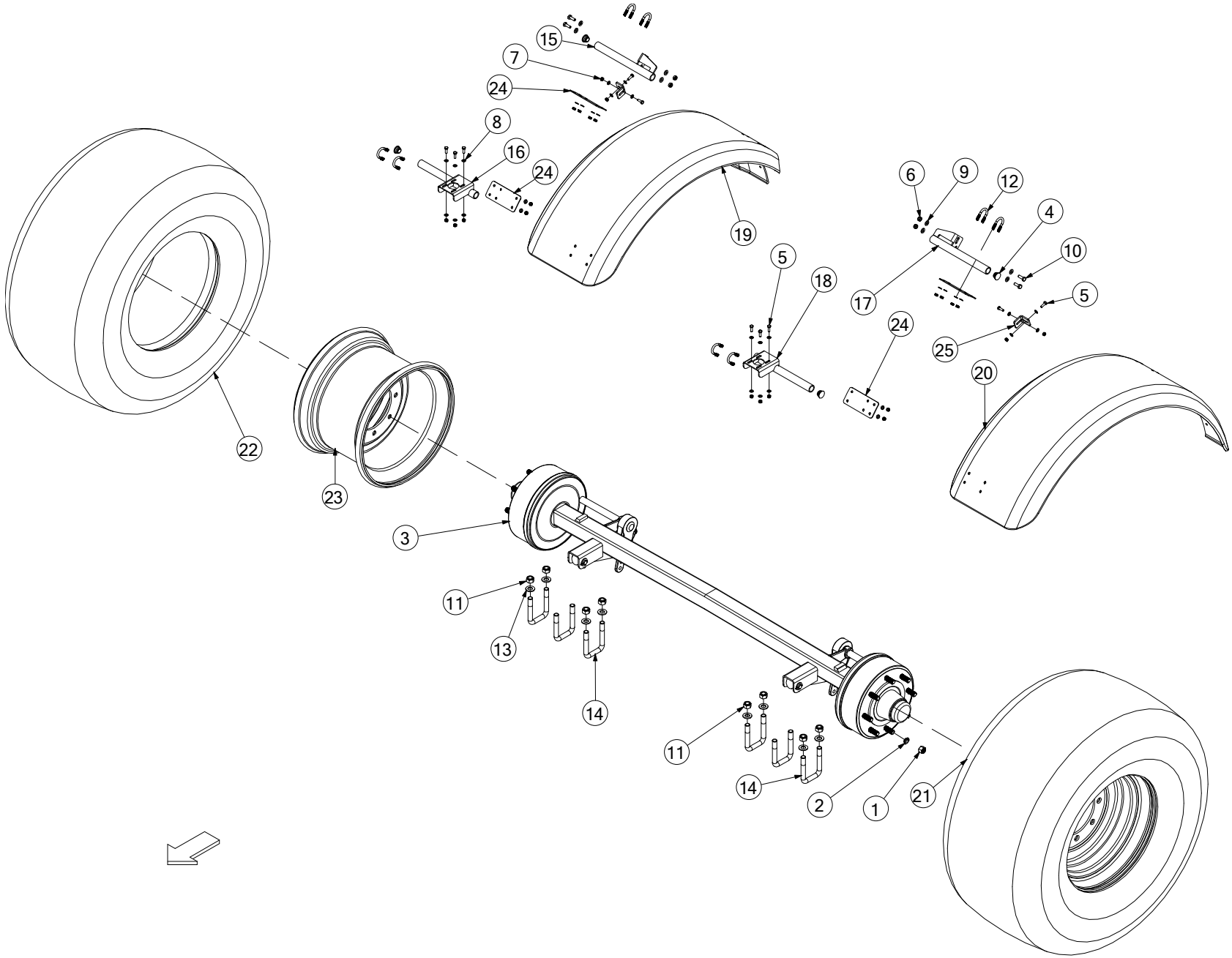

No.	Part No	Description	Qty
1	CAX00056	NUT FOR AXLE B80L030D/S	16
2	CAX00057	WASHER FOR AXLE B80L030D/S	16
3	CAX00096	AXLE 80MM FUSION 300X90 HYD BRAKE	1
3	CAX00101	AXLE 80MM FUSION2 400X80 AIR BRAKE	1
4	CBC00010	CAP PLASTIC INSERT 1"	4
5	CFA00102	SETSCREW M8X25 Z/P	12
6	CFA00123	NUT M10 NYLOC	4
7	CFA00132	NUT M8 NYLOC Z/P	28
8	CFA00147	WASHER FLAT 8MM Z/P	40
9	CFA00201	WASHER FLAT 10 MM Z/P	8
10	CFA00230	SETSCREW M10X30 Z/P GRADE 12.9	4
11	CFA00418	NUT M20X1.5 NYLOC FINE THREAD	12
12	CFA00943	U-BOLT M8X1.25X45X55 FOR 33.7 TUBE	8
13	CFA02223	WASHER M20 DIN6916 GALV HV PEINER	12
14	CFA02240	U-BOLT M20X1.5X101X130	6
14	CFA02302	U-BOLT M20X1.5X101X150 *USED WITH 710 WHEELS ONLY ALONG WITH 20MM AXLE PLATES (CZL02042)*	6
14	CFA00663	BOLT M20X220 FINE 10.9 SC *USED ON KOREAN MACHINES ONLY ALONG WITH 20MM AXLE PLATES (CZL02032)*	8
15	CGD00298	MUDGUARD BRACKET WELD RH REAR	1
16	CGD00299	MUDGUARD BRACKET WELD RH FRONT	1
17	CGD00307	MUDGUARD BRACKET WELD LH REAR	1
18	CGD00308	MUDGUARD BRACKET WELD LH FRONT	1
19	CPL00148	PLASTIC MUDGUARD RH *FOR WHEEL WIDTH LESS THAN 600*	1
19	CPL00298	MUDGUARD WIDE RH FUSION *FOR WHEEL WIDTH GREATER THAN 600 (REPLACES STD MUDGUARD + EXTENSION PLATE CZB04443)*	1
20	CPL00153	PLASTIC MUDGUARD LH *FOR WHEEL WIDTH LESS THAN 600*	1
20	CPL00297	MUDGUARD WIDE LH FUSION *FOR WHEEL WIDTH GREATER THAN 600 (REPLACES STD MUDGUARD + EXTENSION PLATE CZB04443)*	1
0	0	0	0
21	CWH00053	WHEEL ASY 560/60R22.5 VREDESTEIN *STANDARD - INCLUDES TYRE & WHEEL RIM (ITEMS 22 & 23)*	2
22	CWH00055	TYRE 560/60R22.5 FLOTATION PRO *STANDARD*	2
23	CWH00034	WHEEL RIM 16X22.5 *STANDARD*	2
0	0	0	0
21	CWH00068	WHEEL ASY 560/60R22.5 BKT *OPTIONAL - INCLUDES TYRE & WHEEL RIM (ITEMS 22 & 23)*	2
22	CWH00074	TYRE 560/60R22.5 AGRIMAX FL 630 *OPTIONAL*	2
23	CWH00034	WHEEL RIM 16X22.5 *OPTIONAL*	2
0	0	0	0
21	CWH00088	WHEEL 650/55 R22.5 BKT *OPTIONAL - INCLUDES TYRE & WHEEL RIM (ITEMS 22 & 23)*	2
22	CWH00273	TYRE 650/55 R22.5 BKT *OPTIONAL*	2
23	CWH00057	WHEEL RIM 20X22.5 *OPTIONAL*	2

No.	Part No	Description	Qty
0	0	0	0
21	CWH00054	WHEEL ASY 650/50R22.5 VREDESTEIN *OPTIONAL - INCLUDES TYRE & WHEEL RIM (ITEMS 22 & 23)*	2
22	CWH00056	TYRE 650/50R22.5 FLOTATION PRO *OPTIONAL*	2
23	CWH00057	WHEEL RIM 20X22.5 *OPTIONAL*	2
0	0	0	0
21	CWH00290	WHEEL 650/50R22.5 ALLIANCE 885 *OPTIONAL - INCLUDES TYRE & WHEEL RIM (ITEMS 22 & 23)*	2
22	CWH00291	TYRE 650/50 R22.5 ALLIANCE 885 *OPTIONAL*	2
23	CWH00057	WHEEL RIM 20X22.5 *OPTIONAL*	2
0	0	0	0
21	CWH00281	WHEEL ASSY 680 50 R22.5 FLO TRAC *OPTIONAL - INCLUDES TYRE & WHEEL RIM (ITEMS 22 & 23)*	2
22	CWH00292	TYRE 680 50 R22.5 TRAC VRED *OPTIONAL*	2
23	CWH00057	WHEEL RIM 20X22.5 *OPTIONAL*	2
0	0	0	0
21	CWH00271	WHEEL ASSY 710/45R22.5 TRAC-35 VREDESTEIN *OPTIONAL (MACHINES PRIOR TO SERIAL No 659341 ALSO ORDER 2X SPACERS CZL02042 & 6X U-BOLTS CFA02302)*	2
22	CWH00278	TYRE 710/45 R22.5 FLO-TRAC VREDESTEIN *OPTIONAL*	2
23	CWH00279	WHEEL RIM 24.00X22.5 (OFFSET -35MM) *OPTIONAL (MACHINES PRIOR TO SERIAL No 659341 ALSO ORDER 2X SPACERS CZL02042 & 6X U-BOLTS CFA02302)*	2
0	0	0	0
24	CZC04658	3MM L MUDGUARD BACKING PLATE FRONT	4
25	CZF06383	6MM PLATE MUDGUARD	2

Chains & Belts (943)

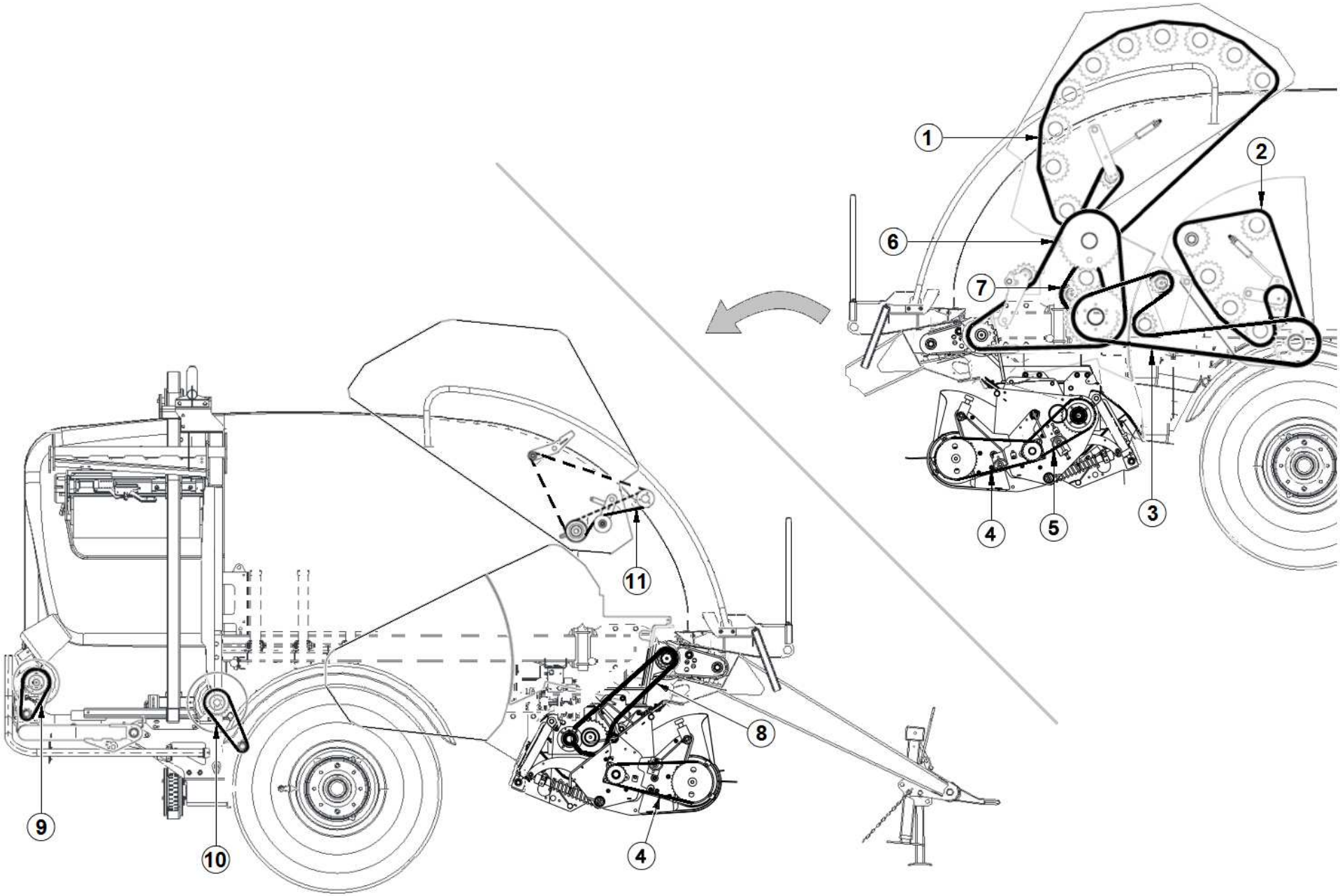

No.	Part No	Description	Qty
0	CCH00055	CHAIN KIT COMPLETE FUSION 2 AND FUSION3	1
COMPLETE SET OF CHAINS (INCLUDES ITEMS 1 THROUGH 10) WITH CAM-TRACK VERSION ITEM 5			
1	CCH00036	20B 164 PITCHES + CON LINK	1
2	CCH00038	20B 105 PITCHES+CON LINK	1
3	CCH00037	20B 124 PITCHES + CON LINK	1
4	CCH00195	CHAIN ASA60H 3/4 76 P INC JOINERLINK	2
CAM-LESS PICK-UP ONLY (IF AUGER SPROCKET IS 19T USE AS IS & IF AUGER SPROCKET IS 15T REMOVE 2 LINKS)			
4	CCH02026	CHAIN ASA60H 3/4" 78 INC LINK	2
CAM-TRACK PICK-UP ONLY (IF AUGER SPROCKET IS 19T USE AS IS & IF AUGER SPROCKET IS 15T REMOVE 2 LINKS)			
5	CCH02025	CHAIN ASA60H 3/4" 62 INC LINK	1
(IF AUGER SPROCKET IS 19T USE AS IS & IF AUGER SPROCKET IS 15T REMOVE 2 LINKS)			
6	CCH00163	100HE 92 PITCHES + CON LINK	1
7	CCH00159	CHAIN 20B 32 PITCHES + CON LINK	1
USED ON NRF FUSION 2 & 3 PLUS MACHINES UP TO SERIAL No 656740 & STD FUSION 2 & 3 UP TO SERIAL No 659000			
7	CCH00042	CHAIN 20B 33 PITCHES+CON LINK	1
USED ON NRF FUSION 3 PLUS MACHINES FROM SERIAL No 656741 & STANDARD FUSION 3 FROM SERIAL No 659001			
8	CCH00161	16B2 68 PITCHES + CON LINK	1
9	CCH00043	ASA60H 36 PITCHES + CON LINK	1
10	CCH00162	ASA60H 48 PITCHES + CON LINK	1
11	CBE00164	V BELT A78	1
USED ON STANDARD MACHINE ONLY			
11	CBE00234	V BELT A54	1
USED ON FUSION 2 & 3 PLUS NRF BARREL WRAP MACHINES (WITH 100MM ANT00145 PULLEY) UP TO SERIAL No 664520			
11	CBE00306	V BELT A59	1
USED ON FUSION 3 PLUS MACHINES (WITH 160MM ANT00092 PULLEY) FROM SERIAL No 664521			

No.	Part No	Description	Qty

Panels LH (807)

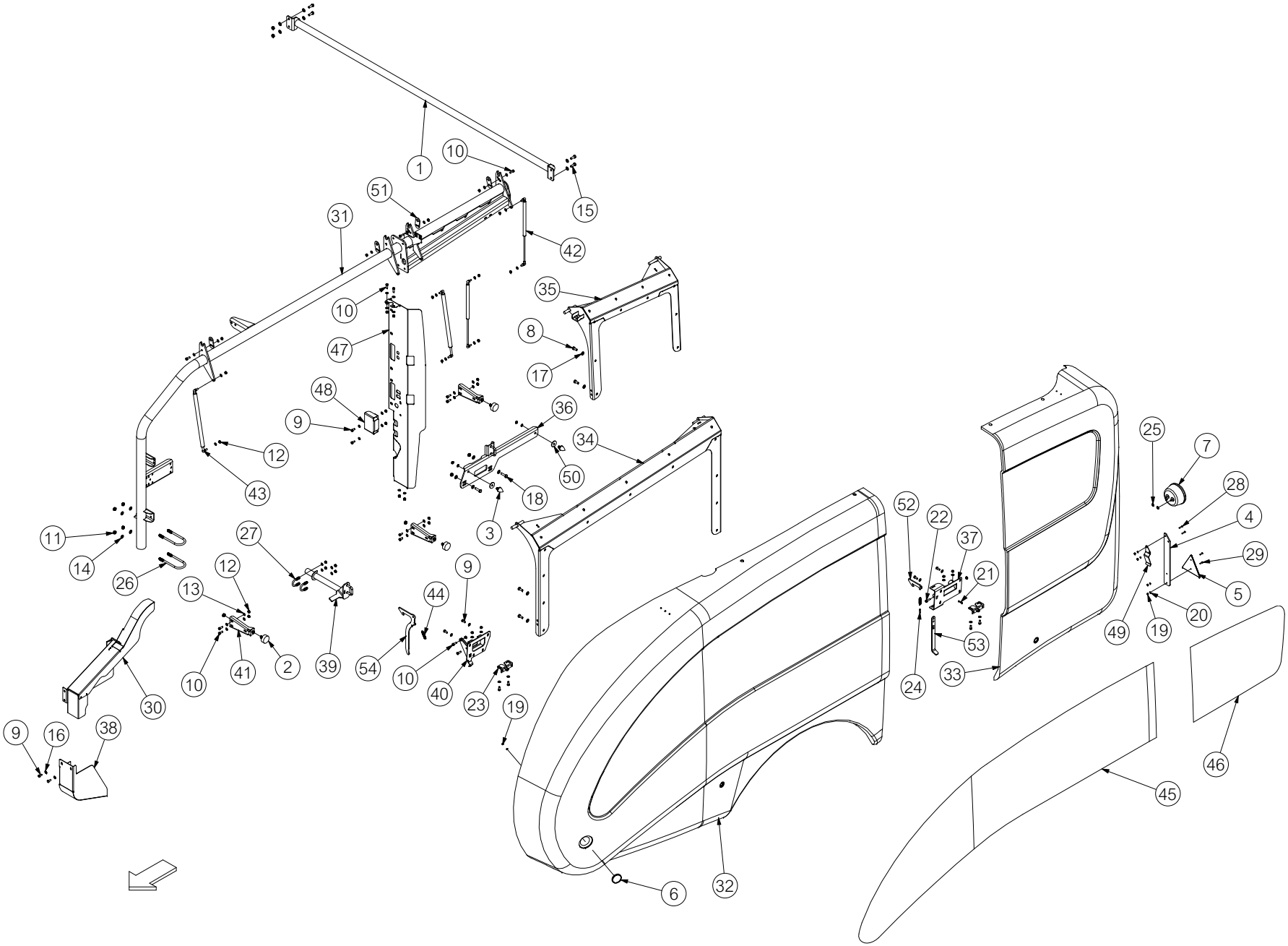

No.	Part No	Description	Qty
1	ACH00881	DOOR FRAME TIE BAR ASSY *USED UP TO SERIAL No 662265 (BUT EXCLUDES MACHINES FROM SERIAL No 662001 TO 662064)*	1
1	CGD00361	TIE BAR WELD ASSEMBLEY FUSION CT *USED FROM SERIAL No 662266 (ALSO INCLUDES MACHINES FROM SERIAL No 662001 TO 662064)*	1
2	CBE00002	BUFFER RUBBER 50X21 M10X28 *USED UP TO SERIAL No 662618*	3
2	CBE00275	BUFFER RUBBER 75X25 M12X30 *USED FROM SERIAL No 662619*	3
3	CBE00028	BUFFER RUBBER 30X36 M8/27 57SH *USED UP TO SERIAL NO 656977*	2
3	CBE00002	BUFFER RUBBER 50X21 M10X28 *USED FROM SERIAL NO 656978*	2
4	CBE00239	RUBBER REFLECTOR HANGER STRIP	1
5	CEL00077	REFLECTOR REAR TRIANGULAR RED	1
6	CEL00239	ROUND AMBER REFLECTOR BOLT ON TYPE *USED UP TO SERIAL No 665426 ONLY*	1
7	CEL00831	TAIL LIGHT, CIRCULAR, LED, FUSION 3	1
8	CFA00024	SETSCREW M10X25 Z/P	28
9	CFA00052	SETSCREW M8X20 Z/P	20
10	CFA00102	SETSCREW M8X25 Z/P	14
11	CFA00123	NUT M10 NYLOC	12
12	CFA00132	NUT M8 NYLOC Z/P	39
13	CFA00147	WASHER FLAT 8MM Z/P	58
14	CFA00201	WASHER FLAT 10 MM Z/P	16
15	CFA00230	SETSCREW M10X30 Z/P	4
16	CFA00249	WASHER SKM8	10
17	CFA00251	WASHER SKM10	28
18	CFA00312	SETSCREW M10X40 Z/P	2
19	CFA00321	NUT M5 NYLOC	5
20	CFA00337	WASHER FLAT 5MM Z/P	5
21	CFA00345	ROLL PIN 6X30 Z/P	1
22	CFA00107	SETSCREW M8X35 Z/P	1
23	CFA00518	CAMLOC BALER DOOR	2
24	CFA00635	SPLIT PIN 5X20 Z/P	1
25	CFA00855	6MM MUDGUARD WASHER	2
26	CFA00919	U-BOLT 60.3 TUBE	2
27	CFA00943	U-BOLT 33.7 TUBE	2
28	CFA00966	SETSCREW M5X25 BUTTON HEAD Z/P	2
29	CFA02278	SETSCREW M5X25 BUTTON HEAD Z/P	2
30	CGD00436	CHAIN GUARD MAIN DRIVE FUSION *USED ON STANDARD FUSION ONLY (REPLACES CGD00177)*	1
30	CGD00329	CHAIN GUARD MAIN DRIVE FUSION PLUS *USED ON FUSION 3 PLUS (NRF BARREL WRAP) MACHINE UP TO SERIAL No 663477*	1
30	CGD00430	CHAIN GUARD MAIN DRVE FUSION PLUS *USED ON FUSION 3 PLUS (NRF BARREL WRAP) MACHINE FROM SERIAL No 663478*	1
31	CGD00251	HINGE HOLDER WELD ASSEMBLY LH *USED UP TO SERIAL No 662265 (BUT EXCLUDES MACHINES FROM SERIAL No 662001 TO 662064)*	1
31	CGD00354	PANEL HINGE TUBE WELD ASSEMBLEY LH FUSION 3 CT *USED FROM SERIAL No 662266 (ALSO INCLUDES MACHINES FROM SERIAL No 662001 TO 662064)*	1
32	CGD00272	LH FRONT SKIN ASSEMBLY FUSION *INCLUDES DECALS (SPECIFY MODEL WHEN ORDERING)*	1

No.	Part No	Description	Qty
33	CGD00273	LH REAR DOOR ASSEMBLY FUS 3 *INCLUDES DECALS (SPECIFY MODEL WHEN ORDERING)*	1
34	CGD00282	HINGE WELD ASSEMBLY FRONT LH FUSION PANEL	1
35	CGD00283	HINGE WELD ASSEMBLY REAR LH FUSION PANEL	1
36	CGD00289	LATCH ASSEMBLY LH REAR FUSION *FOR MACHINES UP TO SERIAL NO 656977 ALSO ORDER 2X CBE00002*	1
36a	CZH02119	10MM L WASHER 10X40X12 *FOR MACHINES UP TO SERIAL NO 656977 ONLY*	2
37	ACH00704	REAR LEFT DOOR LATCH COMPLETE ASM *COMPLETE ASSEMBLY - INCLUDES ITEMS 9, 12, 13, 16, 21, 22, 23, 24, 44, 52 & 53*	1
37	CGD00290	DOOR LATCH WELD LH REAR FUSN 3	1
38	CGD00293	CHAIN GUARD LH FRONT	1
39	CGD00297	LATCH BRACKET ASSEMBLY LH FUS 3	1
40	CGD00300	DOOR LATCH WELD ASSEMBLY LH FRONT FUS 3	1
41	CGD00309	BUFFER BRACKET FUSION *ALSO ORDER CBE00275 (RUBBER BUFFER) ONE PER BRACKET*	3
41	CGD00355	BUFFER BRACKET LONG FUSION CT *REAR POSITION ONLY FROM SERIAL No 662266 (ALSO INCLUDES MACHINES FROM SERIAL No 662001 TO 662064)*	1
42	CRA00171	GAS STRUT 8X18 650N	2
43	CRA00655	GAS STRUT 1200N	2
44	CSG00263	SPRING EXTENSION 1.63X11.5X57	2
45	CST00748	STICKER MCHALE LH MIDDLE FUSION 3	1
45	CST00749	STICKER MCHALE LH FRONT FUSION 3	1
45	CST00750	STICKER 'FUSION 3' 610MM WIDE	1
46	CST00747	STICKER MCHALE LH REAR FUSION 3	1
47	CZB04408	1.5MM L LH DISPENSER GUARD FUSION 3	1
48	CZB04416	1.5MM ELECTRICAL CONNECTION BOX *(RECTANGULAR) USED UP TO SERIAL No 662265 (BUT EXCLUDES MACHINES FROM SERIAL No 662001 TO 662064)*	1
48	CZB04473	1.5MM L ELECTRICAL BOX FUSION 3 CT *(TRIANGULAR) USED FROM SERIAL No 662266 (ALSO INCLUDES MACHINES FROM SERIAL No 662001 TO 662064)*	1
49	CZC04694	3MM REFLECTOR HANGING PLATE LH	1
50	CZD00118	4MM L CUT& TIE SPACER *FOR MACHINES UP TO SERIAL NO 656977 ONLY*	2
51	CZD04814	4MM L HINGE LOCK PLATE FUSION 3 CT *REPLACES CZD04548*	4
52	CZF06016	6MM L REAR LATCH HOOK FUSION 3	1
53	CZF06017	6MM L PLATE *USED UP TO SERIAL No 656740*	1
53	CZC04762	3MM L REAR DOOR LATCH HANDLE FUSION *USED FROM SERIAL No 656741*	1
54	CZF06035	6MM PANEL LATCH HANDLE FUS 3	1

Panels RH (833)

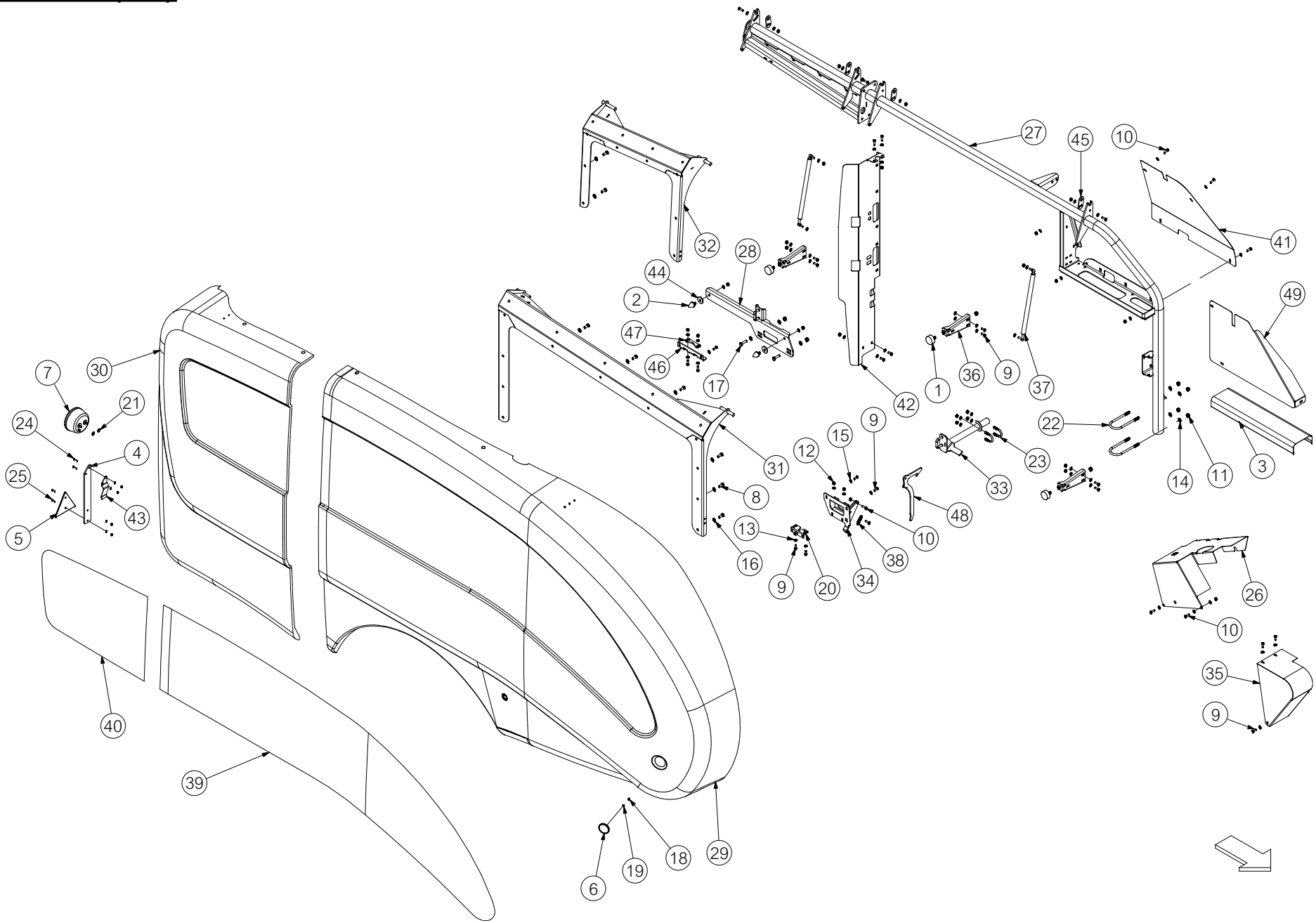

No.	Part No	Description	Qty
1	CBE00002	BUFFER RUBBER 50X21 M10X28 *USED UP TO SERIAL No 662618*	3
1	CBE00275	BUFFER RUBBER 75X25 M12X30 *USED FROM SERIAL No 662619*	3
2	CBE00028	BUFFER RUBBER 30X36 M8/27 57SH *USED UP TO SERIAL NO 656977*	2
2	CBE00002	BUFFER RUBBER 50X21 M10X28 *USED FROM SERIAL NO 656978*	2
3	CBE00238	CANVAS COVER ELECTRICAL CONNECTIONS FUSION *USED ON STANDARD FUSION 3 ONLY*	1
4	CBE00239	RUBBER REFLECTOR HANGER STRIP	1
5	CEL00077	REFLECTOR REAR TRIANGULAR RED	1
6	CEL00239	ROUND AMBER REFLECTOR BOLT ON TYPE *USED UP TO SERIAL No 665426 ONLY*	1
7	CEL00831	TAIL LIGHT, CIRCULAR, LED, FUSION 3	1
8	CFA00024	SETSCREW M10X25 Z/P	28
9	CFA00052	SETSCREW M8X20 Z/P	16
10	CFA00102	SETSCREW M8X25 Z/P	21
11	CFA00123	NUT M10 NYLOC	10
12	CFA00132	NUT M8 NYLOC Z/P	32
13	CFA00147	WASHER FLAT 8MM Z/P	58
14	CFA00201	WASHER FLAT 10 MM Z/P	10
15	CFA00249	WASHER SKM8	11
16	CFA00251	WASHER SKM10	28
17	CFA00312	SETSCREW M10X40 Z/P	2
18	CFA00321	NUT M5 NYLOC	5
19	CFA00337	WASHER FLAT 5MM Z/P	5
20	CFA00518	CAMLOC BALER DOOR	1
21	CFA00855	6MM MUDGUARD WASHER	2
22	CFA00919	U-BOLT 60.3 TUBE	2
23	CFA00943	U-BOLT 33.7 TUBE	2
24	CFA00966	SETSCREW M5X25 BUTTON HEAD Z/P	2
25	CFA02278	SETSCREW M5X25 BUTTON HEAD Z/P	2
26	CGD00242	ROTOR CHAIN GUARD F550	1
27	CGD00250	HINGE HOLDER WELD ASSEMBLY RH *USED UP TO SERIAL No 662265 (BUT EXCLUDES MACHINES FROM SERIAL No 662001 TO 662064)*	1
27	CGD00353	PANEL HINGE TUBE WELD ASSEMBLEY RH FUSION 3 CT *USED FROM SERIAL No 662266 (ALSO INCLUDES MACHINES FROM SERIAL No 662001 TO 662064)*	1
28	CGD00253	REAR DOOR LATCH WELD ASSY FUSION PLASTIC PANEL *FOR MACHINES UP TO SERIAL NO 656977 ALSO ORDER 2X CBE00002*	1
28a	CZH02119	10MM L WASHER 10X40X12 *FOR MACHINES UP TO SERIAL NO 656977 ONLY*	2
29	CGD00270	RH FRONT SKIN ASSEMBLY FUSION *INCLUDES DECALS (SPECIFY MODEL WHEN ORDERING)*	1
30	CGD00271	RH REAR DOOR ASSEMBLY FUS 3 *INCLUDES DECALS (SPECIFY MODEL WHEN ORDERING)*	1
31	CGD00280	HINGE WELD ASSEMBLY RH FRONT FUSION	1
32	CGD00281	HINGE WELD ASSEMBLY RH REAR FUSION	1
33	CGD00291	LATCH CATCH ASSEMBLY	1
34	CGD00292	FUSION LATCH ASSEMBLY FRONT RH PLASTIC PANEL	1
35	CGD00294	CHAIN GUARD RH FRONT	1

No.	Part No	Description	Qty
36	CGD00309	BUFFER BRACKET FUSION *ALSO ORDER CBE00275 (RUBBER BUFFER) ONE PER BRACKET*	3
36	CGD00355	BUFFER BRACKET LONG FUSION CT *REAR POSITION ONLY FROM SERIAL No 662266 (ALSO INCLUDES MACHINES FROM SERIAL No 662001 TO 662064)*	1
37	CRA00655	GAS STRUT 1200N	2
38	CSG00263	SPRING EXTENSION 1.63X11.5X57	1
39	CST00745	STICKER 'MCHALE' RH MIDDLE F3	1
39	CST00746	STICKER 'MCHALE' RH FRONT F3	1
39	CST00750	STICKER 'FUSION 3' 610MM WIDE	1
40	CST00744	STICKER 'MCHALE' RH REAR F3	1
41	CZB04381	1.5MM L MAIN VALVE COVER *USED ON FUSION 3 PLUS UP TO SERIAL No 662265 (BUT EXCLUDES MACHINES FROM SERIAL No 662001 TO 662064)*	1
41	CZB04456	1.5MM L MAIN VALVE GUARD FUSION CT *USED ON FUSION 3 PLUS FROM SERIAL No 662266 (ALSO INCLUDES MACHINES FROM SERIAL No 662001 TO 662064)*	1
42	CZB04405	1.5MM L DISPENSER GUARD	1
43	CZC04693	3MM REFLECTOR HANGING PLATE RH	1
44	CZD00118	4MM L CUT& TIE SPACER *FOR MACHINES UP TO SERIAL NO 656977 ONLY*	2
45	CZD04814	4MM L HINGE LOCK PLATE FUSION 3 CT *REPLACES CZD04548*	4
46	CZD04708	4MM DOOR LATCH RH REAR FUSION 3	1
47	CZF02902	6MM L DOOR RETAINING BRACKET	1
48	CZF06035	6MM PANEL LATCH HANDLE FUS 3	1
49	CZB04454	1.5MM L ELECTRICAL COVER PLATE F3+ & VARIO *USED ON FUSION 3 PLUS UP TO SERIAL No 662265 (BUT EXCLUDES MACHINES FROM SERIAL No 662001 TO 662064)*	1
49	CZB04457	1.5MM L ELECTRICAL COVER PLATE F3+ FV CT *USED ON FUSION 3 PLUS FROM SERIAL No 662266 (ALSO INCLUDES MACHINES FROM SERIAL No 662001 TO 662064)*	1

Front chamber [Idle side] (506)

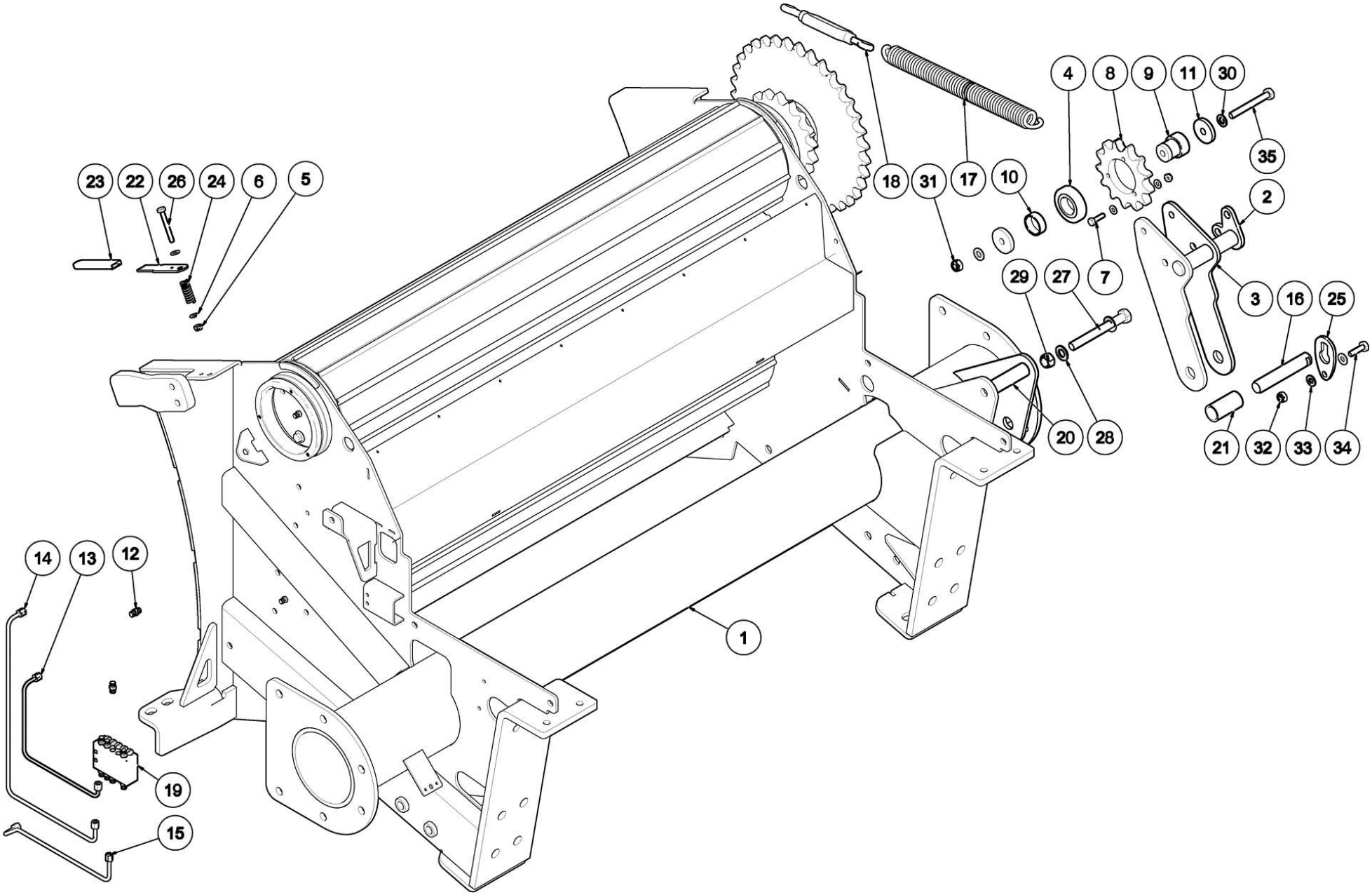

No.	Part No	Description	Qty
1	ACH00889	FRONT CHAMBER SECTION WELD	1
USED ON STANDARD FUSION 2 & 3 MACHINES ONLY UP TO SERIAL No 659000			
1	ACH01197	FRONT CHAMBER FUSION PLUS NRF	1
USED ON NRF FUSION 2 & 3 PLUS MACHINES ONLY - UP TO SERIAL NO. 656740			
1	ACH01332	FRONT CHAMBER FUSION PLUS NRF	1
USED ON NRF FUSION 3 PLUS MACHINES FROM SERIAL No 656741 & STANDARD FUSION 3 FROM SERIAL No 659001			
2	ACH00955	CHAIN TENSIONER COMP ASSY	1
3	ACH00954	CHAIN TENSIONER WELD ASSY	1
4	CBR00062	BEARING RADIAL 6207LLU (SKF)	1
UP TO SERIAL NO. 654732			
4	CBR00294	BEARING RADIAL 6307 2RS	1
FROM SERIAL NO. 654733			
5	CFA00132	NUT M8 NYLOC Z/P	3
6	CFA00147	WASHER FLAT 8MM Z/P	6
7	CFA00316	BOLT M8X30	3
UP TO SERIAL NO. 654454			
8	ACH00580	KIT 13T SPROCKET TENSIONER 6207 BEARING	1
UP TO SERIAL NO. 654732			
8	CMH01252	SPROCKET 1 1/4" 13 TOOTH	1
FROM SERIAL NO. 654733 (6307 BEARING)			
8a	CFA00882	CIRCLIP 80MM INTERNAL	1
FROM SERIAL NO. 654733 (6307 BEARING)			
9	CMH00467	BUSH 45X12.5X52 STEPPED 35	1
10	CXT00185	TUBE 42.4X3X15	1
11	CZG02236	8MM L SPACER PART	2
12	CFA00549	GREASE FITTING 6MM X 1/8"	11
13	CHY02499	GREASE PIPE 1 BOTTOM SECTION D.S	1
MIDDLE ROLLER - USED ON STANDARD FUSION 2 & 3 MACHINES ONLY UP TO SERIAL No 659000			
13	CHY02632	GREASE PIPE 2 BOTTOM SECTION D.S	1
MIDDLE ROLLER - USED ON NRF FUSION 2 & 3 PLUS MACHINES ONLY - UP TO SERIAL NO. 656740			
13	CHY02916	GREASE PIPE 2 BOTTOM SECTION D.S	1
USED ON NRF FUSION 3 PLUS MACHINES FROM SERIAL No 656741 & STANDARD FUSION 3 FROM SERIAL No 659001			
14	CHY02500	GREASE PIPE 2 BOTTOM SECTION D.S	1
TOP ROLLER - USED ON STANDARD FUSION 2 & 3 MACHINES ONLY UP TO SERIAL No 659000			
14	CHY02631	GREASE PIPE 3 BOTTOM SECTION D.S	1
TOP ROLLER - USED ON NRF FUSION 2 & 3 PLUS MACHINES ONLY - UP TO SERIAL NO. 656740			
14	CHY02915	GREASE PIPE 3 BOTTOM SECTION D.S	1
USED ON NRF FUSION 3 PLUS MACHINES FROM SERIAL No 656741 & STANDARD FUSION 3 FROM SERIAL No 659001			
15	CHY02501	GREASE PIPE 3 BOTTOM SECTION D.S	1
BOTTOM ROLLER - USED ON STANDARD FUSION 2 & 3 MACHINES ONLY UP TO SERIAL No 659000			
15	CHY02633	GREASE PIPE 1 BOTTOM SECTION D.S	1
BOTTOM ROLLER - USED ON NRF FUSION 2 & 3 PLUS MACHINES ONLY - UP TO SERIAL NO. 656740			
15	CHY02917	GREASE PIPE 1 BOTTOM SECTION D.S	1
USED ON NRF FUSION 3 PLUS MACHINES FROM SERIAL No 656741 & STANDARD FUSION 3 FROM SERIAL No 659001			
16	CMH00675	PIN 25 X 140 MILLED FOR CAP Z/P	1
17	CSG00206	SPRING EXT 7X36 OD X375	1
18	CFA00774	TURNBUCKLE EYE 12MM	1
19	CVA00166	GREASE BLOCK 10 WAY	1
20	CXT00489	TUBE 26.9X102	1
21	CXT00490	TUBE 33.7X68	1
22	CZC02347	3MM L SENSOR ADJUSTER LATCH	1
23	CBE00042	RUBBER HANDLE NETTER UNIT	1

No.	Part No	Description	Qty
24	CSG00033	SPRING COM 2.5X15X9	1
25	CZF00292	6MM L CAP LONG FOR 25MM PINS	1
26	CFA00056	BOLT M8X65 ZP	1
27	CFA00085	BOLT M16X140 ZP	1
28	CFA00140	WASHER FLAT 16MM ZP	2
29	CFA00128	NUT M16 NYLOC	1
30	CFA00138	WASHER FLAT 12MM ZP	2
31	CFA00124	NUT M12 NYLOC	1
32	CFA00123	NUT M10 NYLOC	1
33	CFA00201	WASHER FLAT 10MM ZP	2
34	CFA00016	BOLT M10X35	1
35	CFA00035	BOLT M12X100 ZP	1

Front chamber [Drive side] (507)

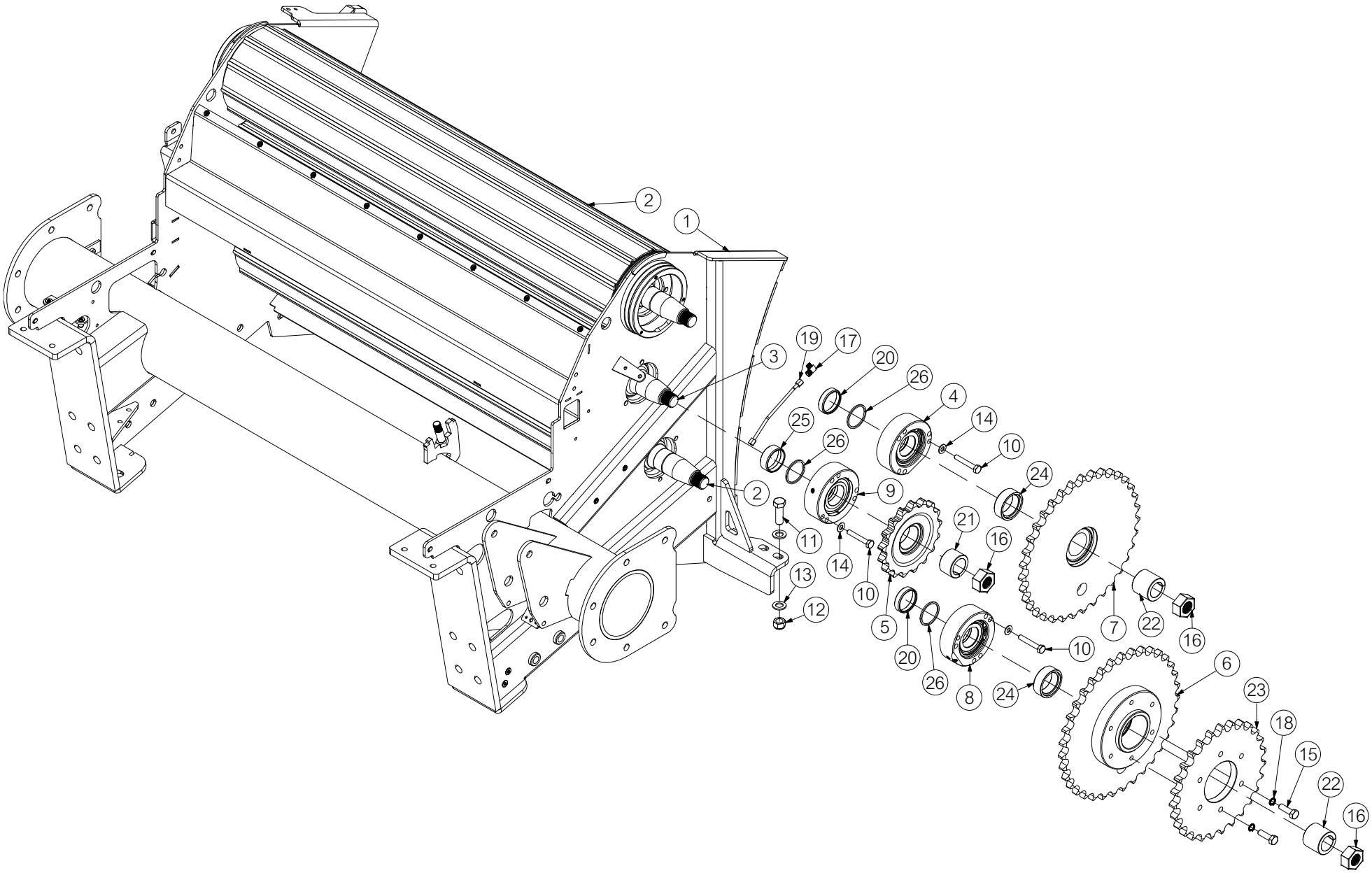

No.	Part No	Description	Qty
1	ACH00889	FRONT CHAMBER SECTION WELD	1
USED ON STANDARD FUSION 2 & 3 MACHINES ONLY UP TO SERIAL No 659000			
1	ACH01197	FRONT CHAMBER FUSION PLUS NRF	1
USED ON NRF FUSION 2 & 3 PLUS MACHINES ONLY - UP TO SERIAL NO. 656740			
1	ACH01332	FRONT CHAMBER FUSION PLUS NRF	1
USED ON NRF FUSION 3 PLUS MACHINES FROM SERIAL No 656741 & STANDARD FUSION 3 FROM SERIAL No 659001			
2	ARC00028	BALER ROLLER 3 BOLT FLANGE	2
3	ARC00030	BALER ROLLER STD COMP. ASSY.	1
4	ART00051	BEARING ROLLER COMP ASSY	1
5	ART00081	1 1/4 PITCH 17 T SPROCKET ASM	1
6	ART00085	SPROCKET ASSY BOTTOM	1
INCLUDES ITEMS 15, 18 & 23			
7	ART00087	SPROCKET ASSY BOTTOM DOOR DRIVE	1
8	ART00051	BEARING ROLLER COMP ASSY	1
9	ART00293	BEARING HOUSING 76210 ASSY	1
10	CFA00028	BOLT M10X65 Z/P	9
11	CFA00116	BOLT M16X50 Z/P	4
12	CFA00128	NUT M16 NYLOC	4
13	CFA00140	WASHER FLAT 16MM Z/P	8
14	CFA00251	WASHER SKM10	9
15	CFA00065	SETSCREW M12X45 ZP	6
REPLACES CFA00324 (SETSCREW M12X40 Z/P)			
16	CFA00401	NUT M30X2 FINE THREAD	3
17	CFA00543	6MM X 1/8 90• GREASE FITTING	1
18	CFA00250	WASHER SKM12	6
REPLACES CFA00623 (WASHER SPRING 12MM Z/P)			
19	CHY02517	GREASE PIPE FRONT SECTION D.S	1
USED ON NRF FUSION 2 & 3 PLUS MACHINES UP TO SERIAL No 656740 & STD FUSION 2 & 3 UP TO SERIAL No 659000			
19	CHY02918	GREASE PIPE FRONT DOOR D.S NRF	1
USED ON NRF FUSION 3 PLUS MACHINES FROM SERIAL No 656741 & STANDARD FUSION 3 FROM SERIAL No 659001			
20	CMH00445	BEARING ROLLER SLEEVE 50 ID	2
21	CMH00507	BUSH 39X56X33 TAPERED COLLET	1
22	CMH00508	BUSH 36X58X47 TAPERED COLLET	2
23	CMH00699	PLATEWHEEL 1 1/4 PITCH 27T	1
24	CMH00736	BUSH 50X68X25 STEPPED 58	2
25	CMH00906	BEARING ROLLER SLEEVE 50 ID	1
26	CZC03243	3MM L SPACER PART FUSION	3

No.	Part No	Description	Qty

Bottom chamber door [Idle side] (503)

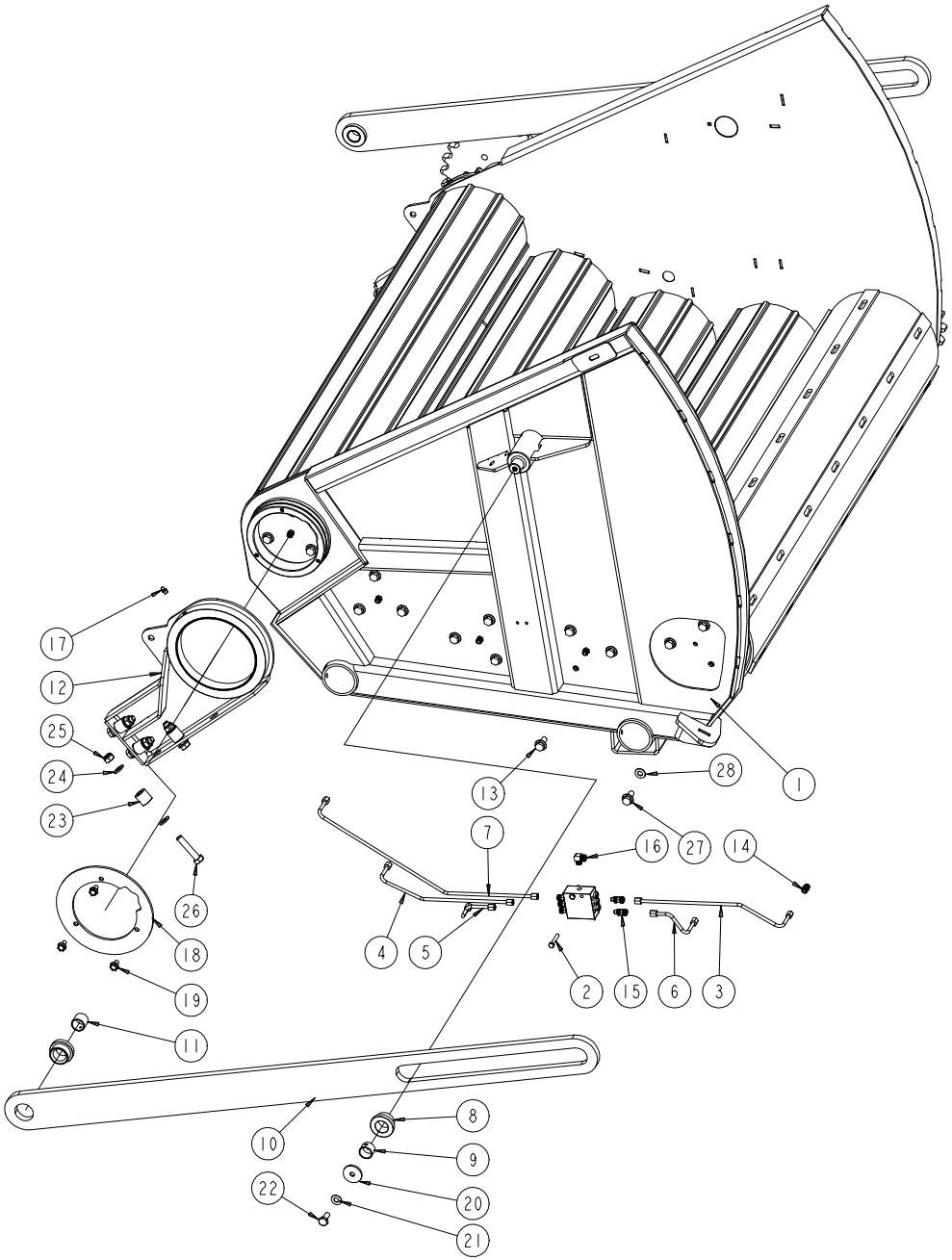

No.	Part No	Description	Qty
1	ACH00890	BOTTOM DOOR WELD ASM	1
USED ON NRF FUSION 2 & 3 PLUS MACHINES UP TO SERIAL No 656740 & STD FUSION 2 & 3 UP TO SERIAL No 659000			
1	ACH01334	BOTTOM DOOR WELD FUSION NRF	1
USED ON NRF FUSION 3 PLUS MACHINES FROM SERIAL No 656741 & STANDARD FUSION 3 FROM SERIAL No 659001			
2	CFA00099	SETSCREW M6X40 Z/P	4
3	CHY02175	GREASE PIPE 2 BOTTOM DOOR N.D	1
4	CHY02176	GREASE PIPE 3 BOTTOM DOOR N.D	1
5	CHY02177	GREASE PIPE 4 BOTTOM DOOR N.D	1
6	CHY02178	GREASE PIPE 5 BOTTOM DOOR N.D	1
7	CHY02174	GREASE PIPE 1 BOTTOM DOOR N.D	1
8	CMH00989	BUSH 25X50X25	4
9	CBR00040	BEARING GLACIER PM 25 X 20	2
10	CZJ02123	15MM L LINK ARM PART UP TO SERIAL NO 653028	2
10	CZJ02134_1	15MM L LINK ARM PART SERIAL NO 653029 TO 653102	2
10	CZJ02134_2	15MM L LINK ARM PART FROM SERIAL NO 653103	2
11	CBR00039	BEARING GLACIER PM 2525 DX	2
12	ACH00662	BALER DOOR HINGE BOTTOM RIGHT	1
13	CFA00520	SETSCREW M10X25 FLD ZP	12
14	CFA00549	GREASE FITTING 6MM X 1/8" M/M	5
15	CFA00648	GREASE FITTING TO BLOCK 1/8"	10
16	CFA00543	6MM X 1/8" 90⁰ GREASE FITTING	7
17	CFA00118	GREASE NIPPLE M8X1.25 STRAIGHT	1
18	CZE00131	5MM L BALER DOOR HINGE PART	2
19	CFA00766	SETSCREW M8X20 FLANGED DIN6921 Z/P	6
REPLACES CFA00519 (M8X16)			
20	CZD00118	4MM L CUT& TIE SPACER	2
21	CFA00251	WASHER SKM10	2
22	CFA00024	SETSCREW M10X25 Z/P	2
23	CMH00745	C025.4X6.35X0025	8
24	CFA00138	WASHER FLAT 12MM Z/P	16
25	CFA00417	NUT M12X1.5 NYLOC FINE THREAD	8
26	CFA00586	BOLT M12X60X10.9 FINDTHREAD ZP	8
27	CFA00797	SETSCREW M10X25X10.9 ZP	3
28	CFA00798	WASHER M10 NORDLOCK	3

No.	Part No	Description	Qty

Bottom chamber door [Drive side] 1 (504)

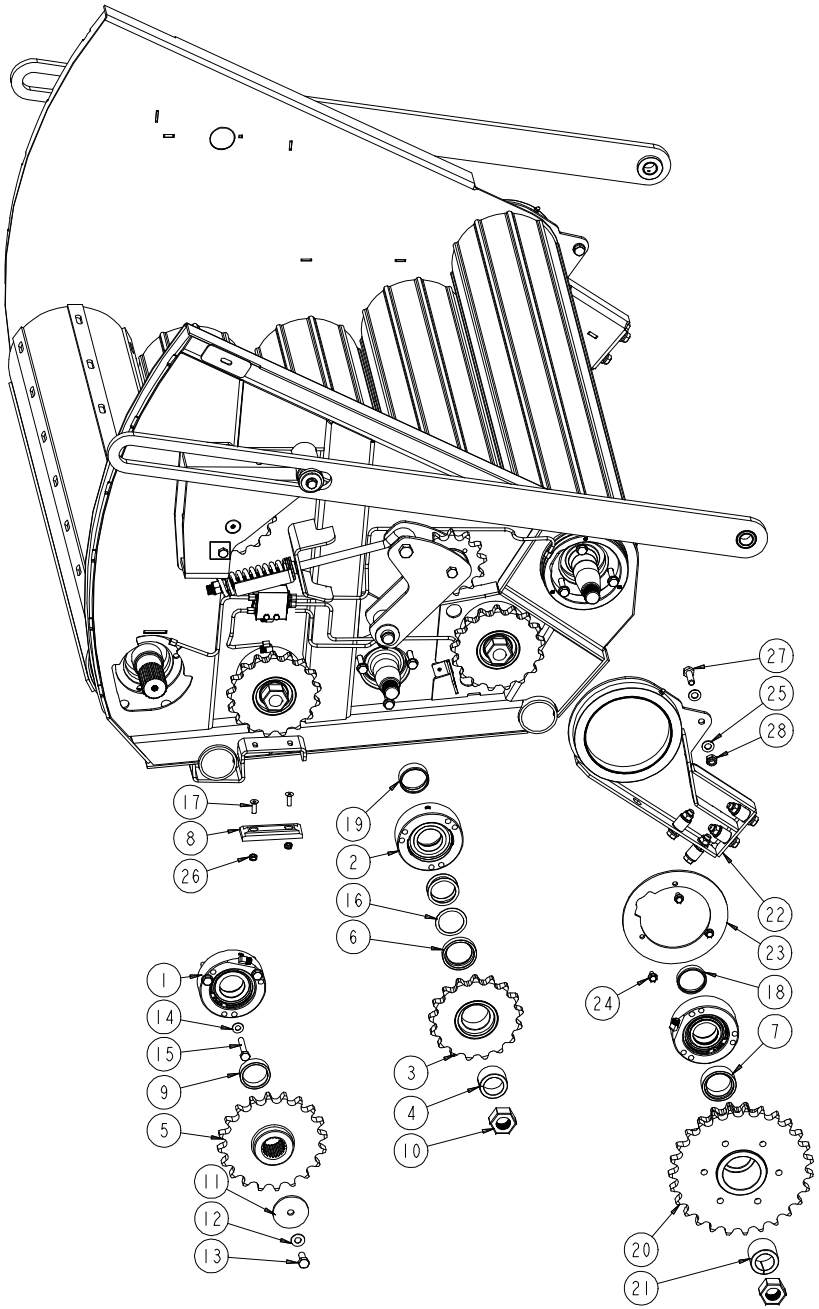

No.	Part No	Description	Qty
1	ART00051	BEARING ROLLER COMP ASSY	2
2	ART00293	BEARING HOUSING 76210 ASSY	3
3	ART00081	1 1/4" PITCH 17 T SPROCKET ASY	3
4	CMH00507	BUSH 39X56X33 TAPER	3
5	CMH00708	SPROCKET 1 1/4" PITCH 20T	1
UP TO SERIAL NO. 654555			
5	CMH01324	SPROCKET 1 1/4" PITCH 20T	1
FROM SERIAL NO. 654556			
6	CMH00510	BUSH 50X68X12.5 STEP	3
7	CMH00736	BUSH 50X68X25 STEPPED 58	1
8	ALA00311	WEAR STRIP ASSY CHAMBER DOOR	1
INCLUDES M8 NUTS (REPLACES CMH00769)			
9	CMH00812	BUSH 50X60X17	1
10	CFA00401	NUT M30X2 FINE THREAD	4
11	CZE00115	BALE SPLITTER WASHER	1
12	CFA00250	WASHER SKM12	1
13	CFA00032	SETSCREW M12X30 Z/P	1
14	CFA00251	WASHER SKM10	15
15	CFA00028	BOLT M10X65 Z/P	15
16	CFA00048	SHIM 50X62X1.0	12
17	CFA00909	BOLT M8X25 SOC CAP Z/P	2
REPLACES CFA00582			
18	CMH00445	BEARING ROLLER SLEEVE 50 ID	1
19	CMH00906	BEARING ROLLER SLEEVE 50 ID	3
20	ART00310	DUPLEX SPROCKET COMP ASSY	1
21	CMH00508	BUSH 36X58X47 TAPER	1
22	ACH00366	BALER DOOR HINGE BOTTOM LEFT	1
23	CZE00131	5MM L BALER DOOR HINGE PART	2
24	CFA00766	SETSCREW M8X20 FLANGED DIN6921 Z/P	6
REPLACES CFA00519 (M8X16)			
25	CFA00138	WASHER FLAT 12MM Z/P	20
26	CFA00132	NUT M8 NYLOC	2
27	CFA00297	BOLT M12X40 Z/P	2
28	CFA00124	NUT M12 NYLOC	2

No.	Part No	Description	Qty

Bottom chamber door [Drive side] 2 (505)

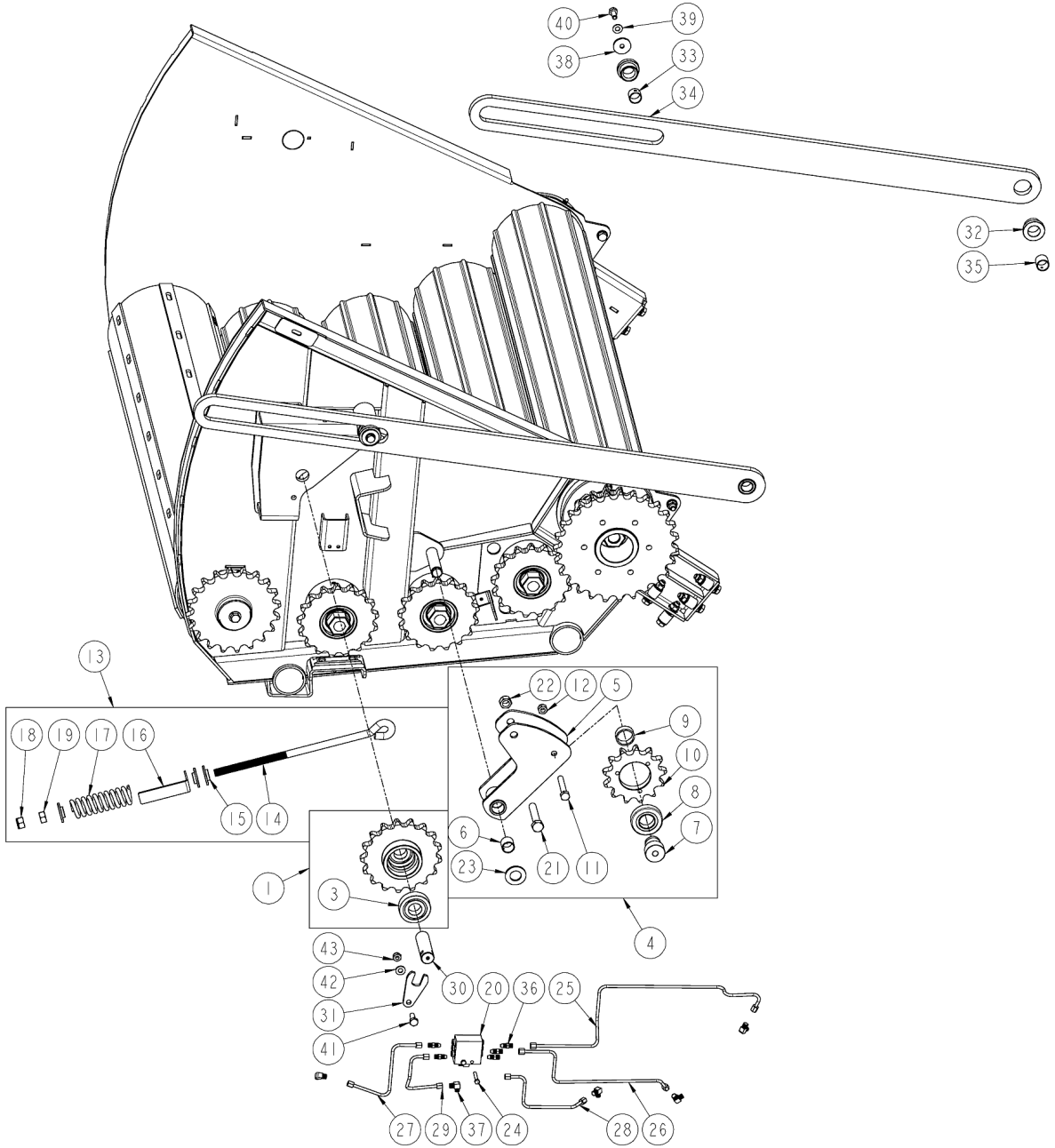

No.	Part No	Description	Qty
1	ART00084	BALER IDLER SPROCKET COMP ASSY *INCLUDES BEARINGS (2X ITEM 3)*	1
3	CBR00052	BEARING 6306	2
4	ACH00360	BOTTOM DOOR CHAIN TENSION ASSY	1
5	ACH00233	BOTTOM DOOR CHAIN TENSIONER ASSY	1
6	CBR00039	BEARING GLACIER PM 2525 DX	2
7	CMH00467	BUSH 45X12.5X52 STEPPED 35	1
8	CBR00062	BEARING RADIAL 6207LLU (SKF) *UP TO SERIAL NO. 654732*	1
8	CBR00294	BEARING RADIAL 6307 2RS *FROM SERIAL NO. 654733*	1
9	CXT00185	TUBE 42.4X3X15	1
10	ACH00580	KIT SPROCKET 1 1/4" 13 TOOTH 6207 BEARING *UP TO SERIAL NO. 654732*	1
10	CMH01252	SPROCKET 1 1/4" 13 TOOTH *FROM SERIAL NO. 654733 (6307 BEARING)*	1
10a	CFA00882	CIRCLIP 80MM INTERNAL *FROM SERIAL NO. 654733 (6307 BEARING)*	1
11	CFA00330	BOLT M12X80 Z/P	1
12	CFA00124	NUT M12 NYLOC	1
13	ACH00437	FRONT CHAIN ADJ.COMP	1
14	CFA00672	EYE BOLT 16MM SPRING TENSIONER	1
15	CMH00464	BUSH 45X17X10 STEPPED 25	3
16	CZC02057	3MM L CHAIN TENSIONE	1
17	CSG00025	SPRING COMPX8.5X44.8	1
18	CFA00128	NUT M16 NYLOC	1
19	CFA00127	NUT M16	1
20	CVA00169	GREASE BLOCK 6 WAY	2
21	CFA00063	BOLT M16X90 Z/P	1
22	CFA00128	NUT M16 NYLOC	1
23	CFA00135	WASHER FLAT 1" Z/P	1
24	CFA00099	SETSCREW M6X40 Z/P	4
25	CHY02169	GREASE PIPE 1 BOTTOM DOOR D.S	1
26	CHY02170	GREASE PIPE 2 BOTTOM DOOR D.S	1
27	CHY02171	GREASE PIPE 3 BOTTOM DOOR D.S	1
28	CHY02172	GREASE PIPE 4 BOTTOM DOOR D.S	1
29	CHY02173	GREASE PIPE 5 BOTTOM DOOR D.S	1
30	CMH01123	PIM 30X100 MILLED FOR CAP *USED UP TO SERIAL No 666006*	1
30	CMH03029	SHAFT 30X122 LONG IDLE SPROCKET BOTTOM DOOR *USED FROM SERIAL No 666007*	1
31	CZF04850	6MM L PIN RETAINER CLIP	1
32	CMH00989	BUSH 25X50X25	4
33	CBR00040	BEARING GLACIER PM 25 X 20	2
34	CZJ02123	15MM L LINK ARM PART UP TO SERIAL NO.653028 *(STRAIGHT ARM) UP TO SERIAL NO 653028*	2
34	CZJ02134.1	15MM L LINK ARM PART SERIAL NO.653029 TO 653102 *(CURVED ARM) SERIAL NO 653029 TO 653102*	2
34	CZJ02134.2	15MM L LINK ARM PART FROM SERIAL NO.653103 *(STRAIGHT ARM) FROM SERIAL NO 653103 ON*	2
35	CBR00039	BEARING GLACIER PM 2525 DX	2

No.	Part No	Description	Qty
36	CFA00648	GREASE FITTING TO BLOCK 1/8"	10
37	CFA00543	6MM X 1/8" 90◆ GREASE FITTING	7
38	CZD00118	4MM L CUT& TIE SPACER	2
39	CFA00251	WASHER SKM10	2
40	CFA00024	SETSCREW M10X25 Z/P	2
41	CFA00230	SETSCREW M10X30 Z/P	1
42	CFA00201	WASHER FLAT 10 MM Z/P	1
43	CFA00123	NUT M10 NYLOC	1

Top chamber door NRF [Idle side] (830)

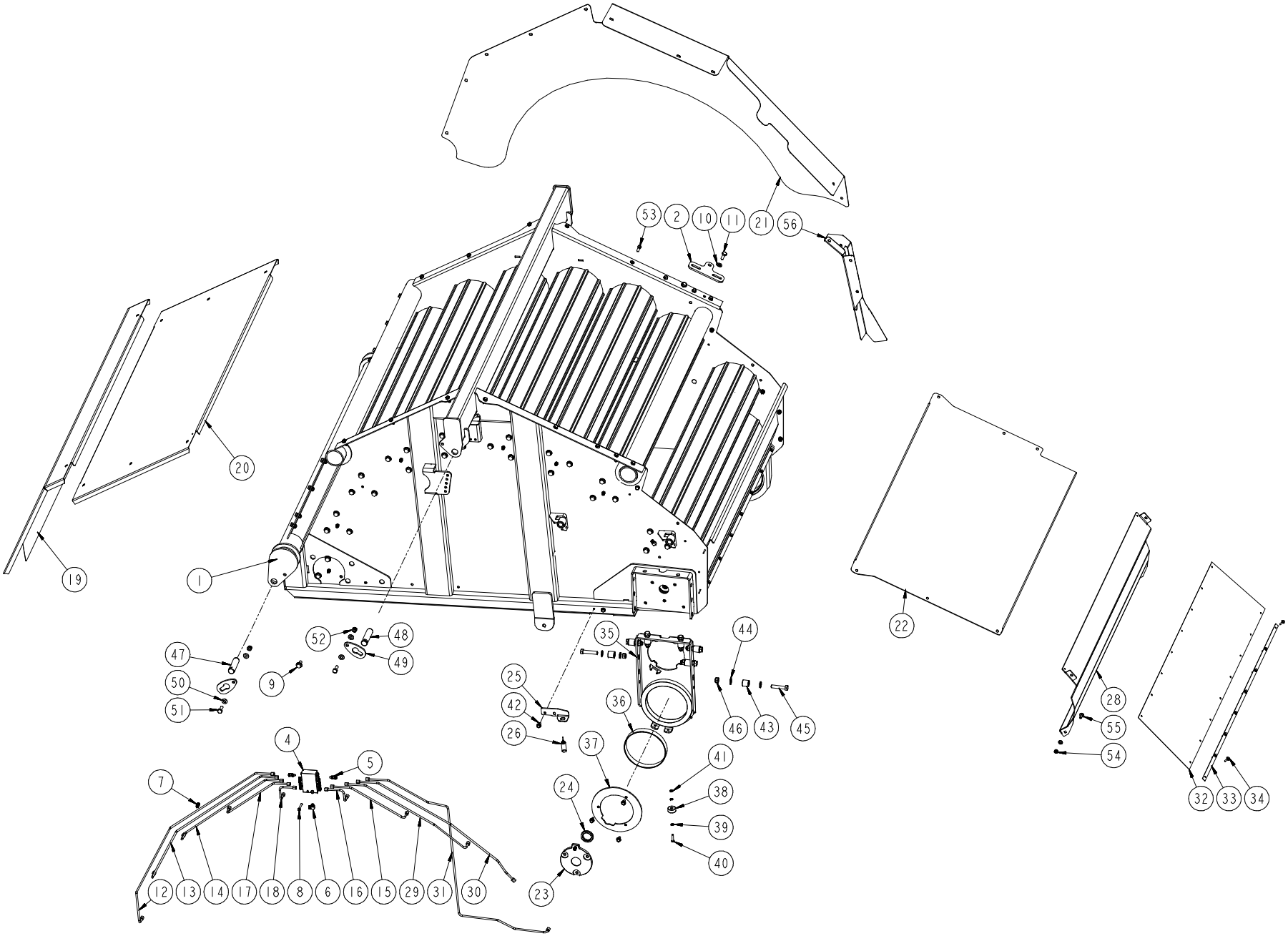

No.	Part No	Description	Qty
1	ACH01204	TOP DOOR WELD ASSY FUSION NRF	1
UP TO SERIAL NO. 656740			
1	ACH01336	TOP DOOR WELD ASSY FUSION NRF	1
FROM SERIAL NO. 656741			
2	CZF02654	6MM L SPRING ADJUSTER PART	1
4	CVA00166	GREASE BLOCK 10 WAY	2
5	CVA00172	VALVE CHECK 1/8" - M6LL BODY	20
6	CFA00543	6MM X 1/8" 90• GREASE FITTING	3
7	CFA00549	GREASE FITTING 6MM X 1/8" M/M	19
8	CFA00099	SETSCREW M6X40 Z/P	4
9	CFA00520	SETSCREW M10X25 FLD ZP	27
10	CFA00201	WASHER FLAT 10 MM Z/P	4
11	CFA00024	SETSCREW M10X25 Z/P	2
12	CHY02161	GREASE PIPE 2 TOP DOOR N.D	1
13	CHY02162	GREASE PIPE 3 TOP DOOR N.D	1
14	CHY02163	GREASE PIPE 4 TOP DOOR N.D	1
15	CHY02165	GREASE PIPE 6 TOP DOOR N.D	1
16	CHY02168	GREASE PIPE 9 TOP DOOR N.D	1
17	CHY02166	GREASE PIPE 7 TOP DOOR N.D	1
18	CHY02167	GREASE PIPE 8 TOP DOOR N.D	1
19	CGD00313	TOP DOOR LOWER GUARD WITH THREADED INSERTS	1
20	CGD00312	TOP DOOR GUARD WITH THREADED INSERTS	1
21	CZB04400	1.5MM L TOP DOOR BARREL WRAP CHAIN GUARD FUS 3	1
UP TO SERIAL NO. 656740			
21	CZB02467	TOP DOOR BARREL WRAP CHAIN GUARD FUS 3	1
FROM SERIAL NO. 656741			
22	CZB00241	TOP DOOR PANEL FUSION NRF	1
23	ARC00150	SEAL PLATE ASSY NET CLUTCH	1
24	CSE00098	SEAL RADIAL SHAFT SEAL 35X50X7	1
25	CZD02505	4MM L SENSOR BRACKET FUSION	1
26	CEL00767	SENSOR M18 PROX M12 PLUG	1
28	ARC00369	ROLLER GUARD FUS3 TOP DOOR NRF	1
REPLACES ARC00323			
29	CHY02494	GREASE PIPE 6 TOP DOOR N.D	1
30	CHY02634	GREASE PIPE 4 TOP DOOR N.D	1
31	CHY02496	GREASE PIPE 2 TOP DOOR N.D	1
32	CBE00031	CANVAS 1260X300 NET BOX COVER	1
33	CZB02179	1.5 MM L CURTAIN RETAINER STRIP	2
34	CFA00619	TEK SCREW M6 GALV. DIPPED	16
35	ACH01228	HINGE FUSION 2 BARREL WRAP	1
36	CBR00051	BEARING GLACIER PM 170 X 25	1
37	CZE00131	5MM L BALER DOOR HINGE PART	2
38	CEL00017	MAGNET BLUE WHEEL	1
39	CFA00144	WASHER FLAT 6MM Z/P	2
40	CFA00190	SETSCREW M6X30 STAINLESS STEEL	1
41	CFA00131	NUT M6 NYLOC	1
42	CFA00766	SETSCREW M8X20 FLANGED DIN6921 Z/P	8
REPLACES CFA00519 (M8X16)			
43	CMH00745	BUSH 12X25X25	14
44	CFA00138	WASHER FLAT 12MM Z/P	28

No.	Part No	Description	Qty
45	CFA00586	BOLT M12X60X10.9 FINE THREAD ZP	14
46	CFA00417	NUT M12X1.5 NYLOC FINE THREAD	14
47	CMH01561	PIN 25X68 MILLED FOR CAP Z/P	2
REPLACES CMH00421			
48	CMH00422	PIN 25 X 100 MILLED FOR CAP Z/P	2
49	CZF00292	6MM L CAP LONG FOR 25MM PINS	4
50	CFA00201	WASHER FLAT 10 MM Z/P	8
51	CFA00230	SETSCREW M10X30 Z/P	4
52	CFA00123	NUT M10 NYLOC	4
53	CFA00052	SETSCREW M8X20 Z/P	29
54	CFA00132	NUT M8 NYLOC Z/P	29
55	CFA00506	SETSCREW M8X20 CUPHEAD SQ ZP	2
56	CZB04402	1.5MM L CHAIN GUARD TOP DOOR FUS 3	1

Top chamber door [Drive side] (509)

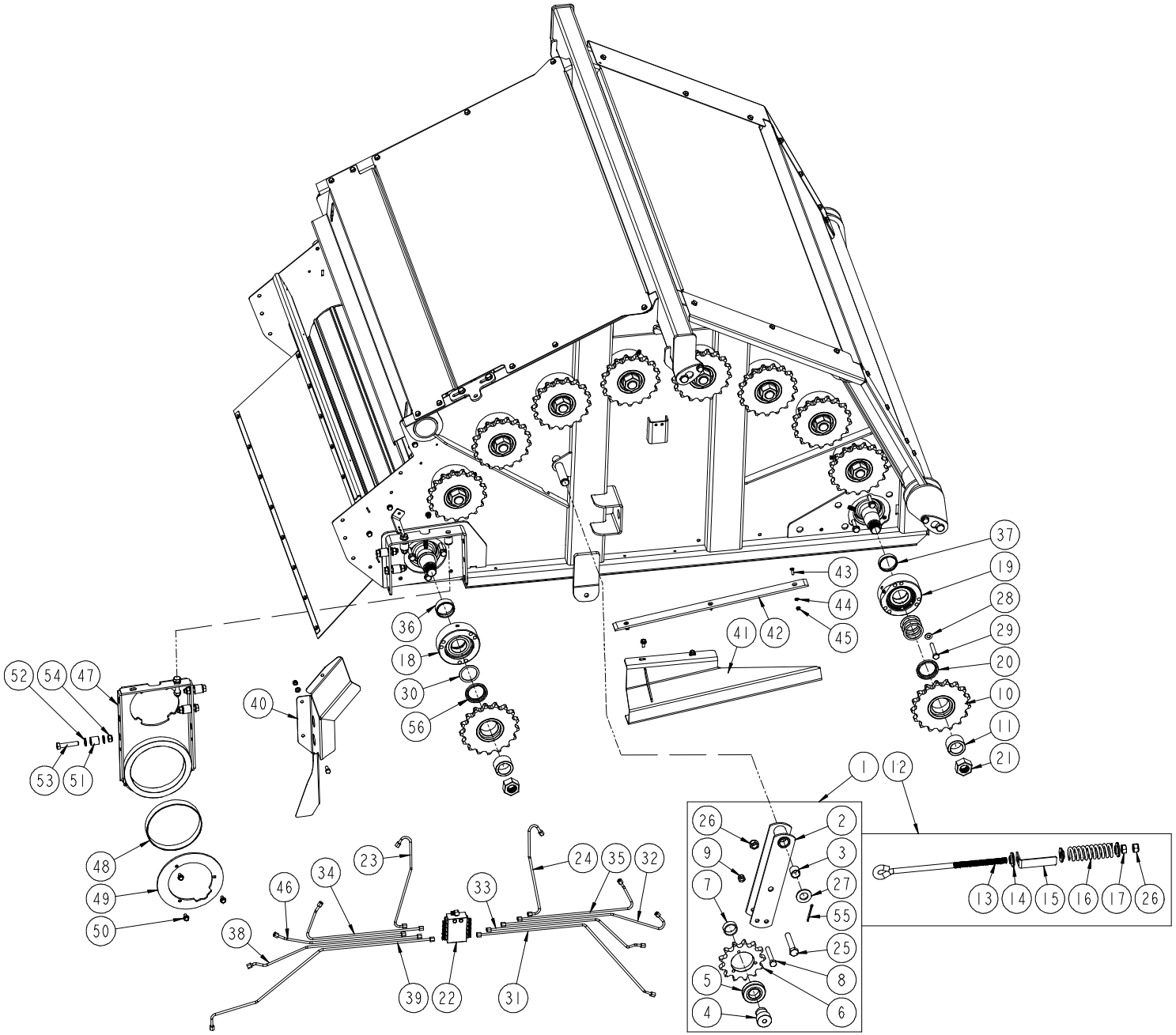

No.	Part No	Description	Qty
1	ACH00359	DOOR CHAIN TENSION COMP ASSY	1
2	ACH00188	DOOR CHAIN TENSION WELD ASSY	1
3	CBR00039	BEARING GLACIER PM 2525 DX	2
4	CMH00467	BUSH 45X12.5X52 STEPPED 35	1
5	CBR00062	BEARING RADIAL 6207LLU (SKF)	1
UP TO SERIAL NO. 654732			
5	CBR00294	BEARING RADIAL 6307 2RS	1
FROM SERIAL NO. 654733			
6	ACH00580	KIT SPROCKET 1 1/4" 13 TOOTH 6207 BEARING	1
UP TO SERIAL NO. 654732			
6	CMH01252	SPROCKET 1 1/4" 13 TOOTH	1
FROM SERIAL NO. 654733 (6307 BEARING)			
6a	CFA00882	CIRCLIP 80MM INTERNAL	1
FROM SERIAL NO. 654733 (6307 BEARING)			
7	CXT00185	TUBE 42.4X3X15	1
8	CFA00330	BOLT M12X80 Z/P	1
9	CFA00124	NUT M12 NYLOC	1
10	ART00081	1 1/4" PITCH 17 T SPROCKET ASY	10
11	CMH00507	BUSH 39X56X33 TAPPER	10
12	ACH00437	FRONT CHAIN ADJ COMPLETE	1
13	CFA00672	EYE BOLT 16MM SPRING TENSIONER	1
14	CMH00464	BUSH 45X17X10 STEPPED 25	3
15	CZC02057	3MM L CHAIN TENSIONER BRACKET	1
16	CSG00025	SPRING COMPX8.5X44.8	1
17	CFA00127	NUT M16	2
18	ART00293	BEARING HOUSING 76210 ASSY	9
19	ART00051	BEARING ROLLER COMP ASSY	1
20	CMH00510	BUSH 50X68X12.5 STEPPED	1
21	CFA00401	NUT M30X2 FINE THREAD	10
22	CVA00166	GREASE BLOCK 10 WAY	2
23	CHY02271	GREASE PIPE8 TOP DOOR D.S LONG	1
24	CHY02272	GREASE PIPE9 TOP DOOR D.S LONG	1
25	CFA00063	BOLT M16X90 Z/P	1
26	CFA00128	NUT M16 NYLOC	2
27	CFA00135	WASHER FLAT 1" Z/P	1
28	CFA00251	WASHER SKM10	30
29	CFA00028	BOLT M10X65 Z/P	30
30	CFA00048	SHIM 50X62X1.0	27
31	CHY02152	GREASE PIPE 2 TOP DOOR D.S	1
32	CHY02154	GREASE PIPE 4 TOP DOOR D.S	1
33	CHY02155	GREASE PIPE 5 TOP DOOR D.S	1
34	CHY02156	GREASE PIPE 6 TOP DOOR D.S	1
35	CHY02157	GREASE PIPE 7 TOP DOOR D.S	1
36	CMH00906	BEARING ROLLER SLEEVE 50 ID	9
37	CMH00445	BEARING ROLLER SLEEVE 50 ID	1
38	CHY02497	GREASE PIPE 2 TOP DOOR D.S	1
39	CHY02498	GREASE PIPE 2 TOP DOOR D.S	1
40	CZB02330	1.5MM L CHAIN GUARD PART FUS 2	1
FUSION 2 ONLY			
40	CZB04402	1.5MM L CHAIN GUARD TOP DOOR FUS 3	1

No.	Part No	Description	Qty
FUSION 3 ONLY			
41	ACH00938	CHAIN SLIDE TOP DOOR FUSION II	1
42	CMH01105	WEAR STRIP 10X35X620	1
43	CFA00587	BOLT M6X20 CSK ZP	3
44	CFA00144	WASHER FLAT 6MM Z/P	3
45	CFA00131	NUT M6 NYLOC	3
46	CHY02527	GREASE PIPE 3 TOP DOOR D.S	1
47	ACH00170	HINGE ASSY BALER DOOR	1
48	CBR00051	BEARING GLACIER PM 170 X 25	1
49	CZE00131	5MM L BALER DOOR HINGE PART	2
50	CFA00766	SETSCREW M8X20 FLANGED DIN6921 Z/P	8
REPLACES CFA00519 (M8X16)			
51	CMH00745	C025.4X6.35X0025	14
52	CFA00138	WASHER FLAT 12MM Z/P	28
53	CFA00586	BOLT M12X60X10.9 FINDTHREAD ZP	14
54	CFA00417	NUT M12X1.5 NYLOC FINE THREAD	14
55	CFA00013	SPLIT PIN 5X50 Z/P	1
56	CMH01117	BUSH 50X68X9.5 STEPPED 58	9

Rollers (510)

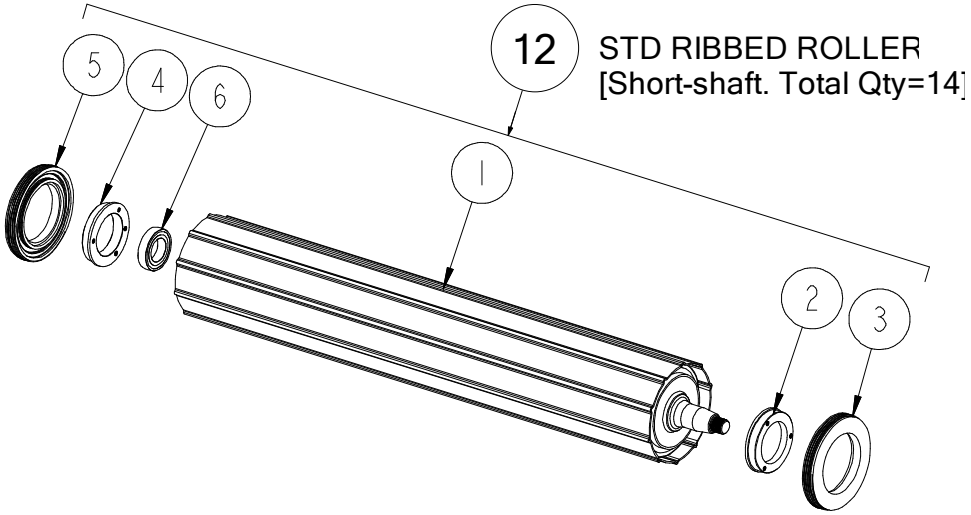
12
STD RIBBED ROLLER
[Short-shaft. Total Qty=14]
5
4
6
1
2
3

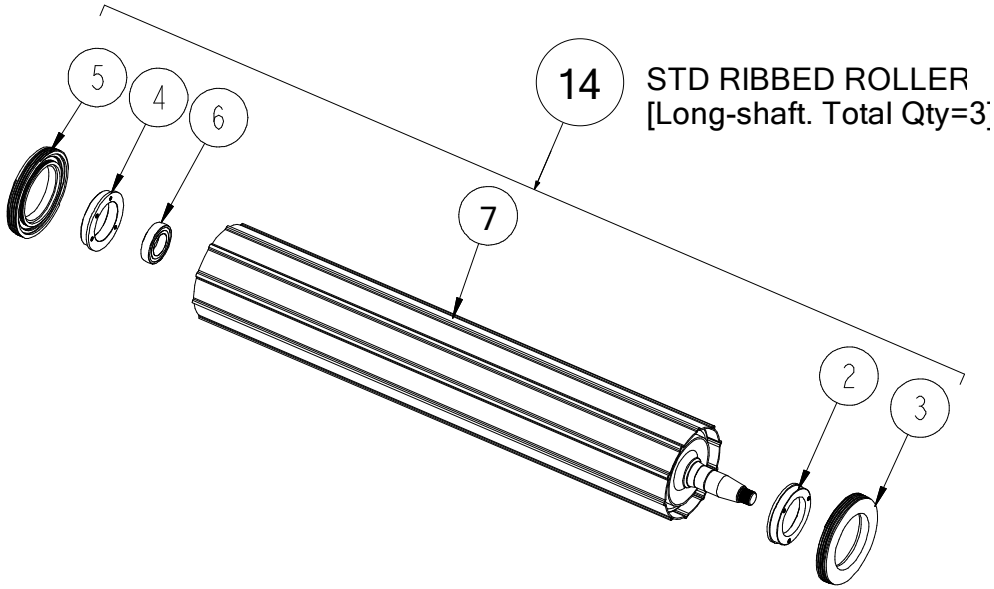
14
STD RIBBED ROLLER
[Long-shaft. Total Qty=3]
5
4
6
7
2
3

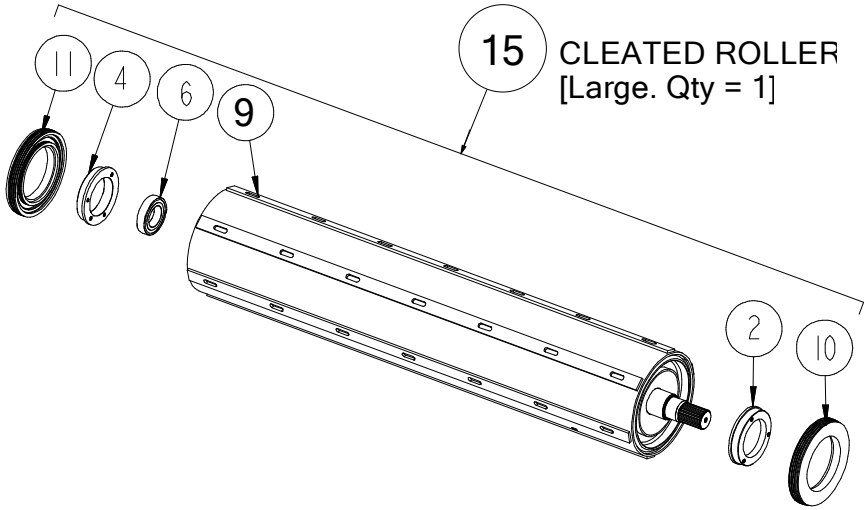
15
CLEATED ROLLER
[Large. Qty = 1]
11
4
6
9
2
10

No.	Part No	Description	Qty
1	ARC00029	ROLLER STD SHAFT	1
2	CMH00696	FLANGE 90X140X25 MACHINED DS	1
3	CPL00052	NYLON SEAL ROLLER DRIVE SIDE	1
4	CMH00697	FLANGE 90X145X25 MACHINED NDS	1
5	CPL00053	NYLON SEAL ROLLER NON DRIVE	1
6	CBR00083	BEARING 1726210-2RS RADIAL	1
7	KST00091	KIT ROLLER LONG SHAFT 55 DIA SHAFT	1
UP TO SERIAL No 665119 (ROLLER REPLACEMENT KIT INCLUDING SEALS, BEARING HSG, ETC) REPLACES ARC00023			
7	ARC00457	BALER ROLLER LONG SHAFT 55MM	1
FROM SERIAL No 665120			
9	ARC00243	NO 1 ROLLER SPARE PARTS REPLACEMENT	1
KIT INCLUDES FLANGES (2/4), BEARING (6), LARGE NYLON SEALS (10/11) & SPROCKET			
10	CPL00052	NYLON SEAL ROLLER DRIVE SIDE	1
UP TO SERIAL No 654555			
10	CPL00108	NYLON SEAL ROLLER (LARGE) DRIVE SIDE	1
FROM SERIAL No 654556			
11	CPL00053	NYLON SEAL ROLLER NON DRIVE	1
UP TO SERIAL No 654555			
11	CPL00107	NYLON SEAL ROLLER (LARGE) NON DRIVE	1
FROM SERIAL No 654556			
12	ARC00030	ROLLER STD SHAFT ASY	14
14	KST00091	KIT ROLLER LONG SHAFT 55 DIA SHAFT	1
UP TO SERIAL No 665119 (ROLLER REPLACEMENT KIT INCLUDING SEALS, BEARING HSG, ETC) REPLACES ARC00028			
14	ARC00459	ROLLER LONG SHAFT Ø55 COMP ASM	1
FROM SERIAL No 665120 (INCLUDES ITEMS 2 THROUGH 7)			
15	ARC00243	NO 1 ROLLER SPARE PARTS REPLACEMENT	1
ALSO INCLUDES SPROCKET (REPLACES ARC00238)			

No.	Part No	Description	Qty

Roller locations (513)

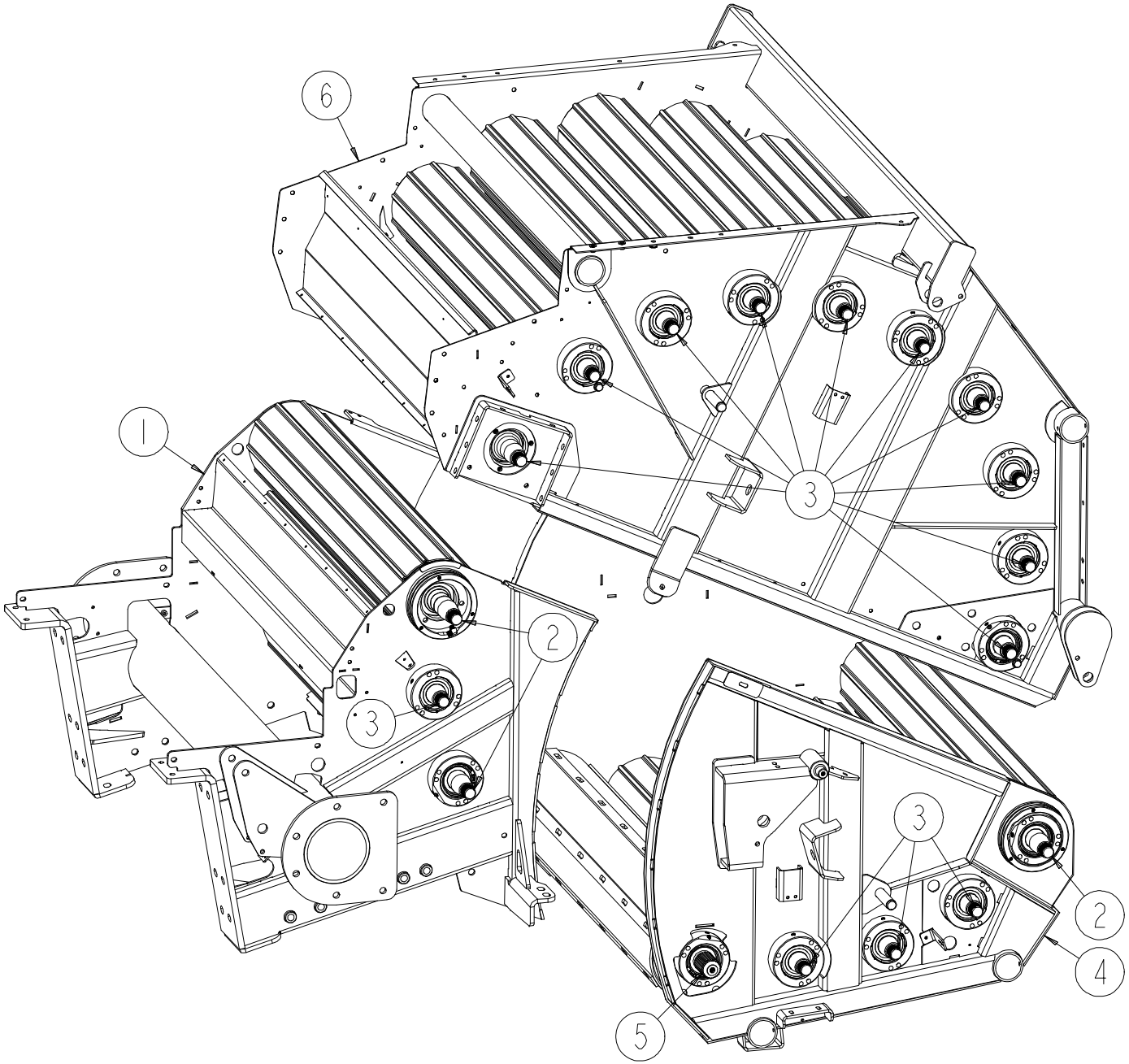

No.	Part No	Description	Qty
1	ACH00889	FRONT CHAMBER SECTION WELD	1
FRONT DOOR WELD USED ON STANDARD FUSION 2 & 3 UP TO SERIAL No 659000			
1	ACH01197	FRONT CHAMBER FUSION PLUS NRF	1
FRONT DOOR WELDMENT USED ON FUSION 2 & 3 PLUS (NRF) UP TO SERIAL No 656740			
1	ACH01332	FRONT CHAMBER FUSION PLUS NRF	1
DOOR WELDMENT USED ON FUSION 3 PLUS (NRF) FROM SERIAL No 656741 & STD FUSION 3 FROM SERIAL No 659001			
2	KST00091	KIT ROLLER LONG SHAFT 55 DIA SHAFT	3
UP TO SERIAL No 665119 (ROLLER REPLACEMENT KIT INCLUDING SEALS, BEARING HSG, ETC) REPLACES ARC00028			
2	ARC00459	ROLLER LONG SHAFT Ø55 COMP ASM	3
FROM SERIAL No 665120			
3	ARC00030	BALER ROLLER STD COMP. ASSY.	14
4	ACH00890	BOTTOM DOOR WELD ASSY	1
DOOR WELD USED ON FUSION 2 &3 PLUS (NRF) UP TO SERIAL No 656740 & STD FUSION 2 &3 UP TO SERIAL No 659000			
4	ACH01334	BOTTOM DOOR WELD FUSION NRF	1
BOTTOM DOOR USED ON FUSION 3 PLUS (NRF) FROM SERIAL No 656741 & STD FUSION 3 FROM SERIAL No 659001			
5	ARC00243	NO1 ROLLER REPLACEMENT KIT	1
INCLUDES ROLLER ARC00183, BEARING CBR00083, FLANGES CMH00696/7, SEALS CPL00107/8 & SPROCKET CMH01324			
6	ACH00973	TOP DOOR WELD ASSY FUSION	1
TOP DOOR WELDMENT USED ON STANDARD FUSION 2 & 3 UP TO SERIAL No 659000			
6	ACH01204	TOP DOOR WELD ASSY FUSION II	1
TOP DOOR WELDMENT USED ON FUSION 2 & 3 PLUS (NRF) UP TO SERIAL No 656740			
6	ACH01336	TOP DOOR WELD ASSY FUSION NRF	1
DOOR WELDMENT USED ON FUSION 3 PLUS (NRF) FROM SERIAL No 656741 & STD FUSION 3 FROM SERIAL No 659001			

No.	Part No	Description	Qty

Bearings (517)

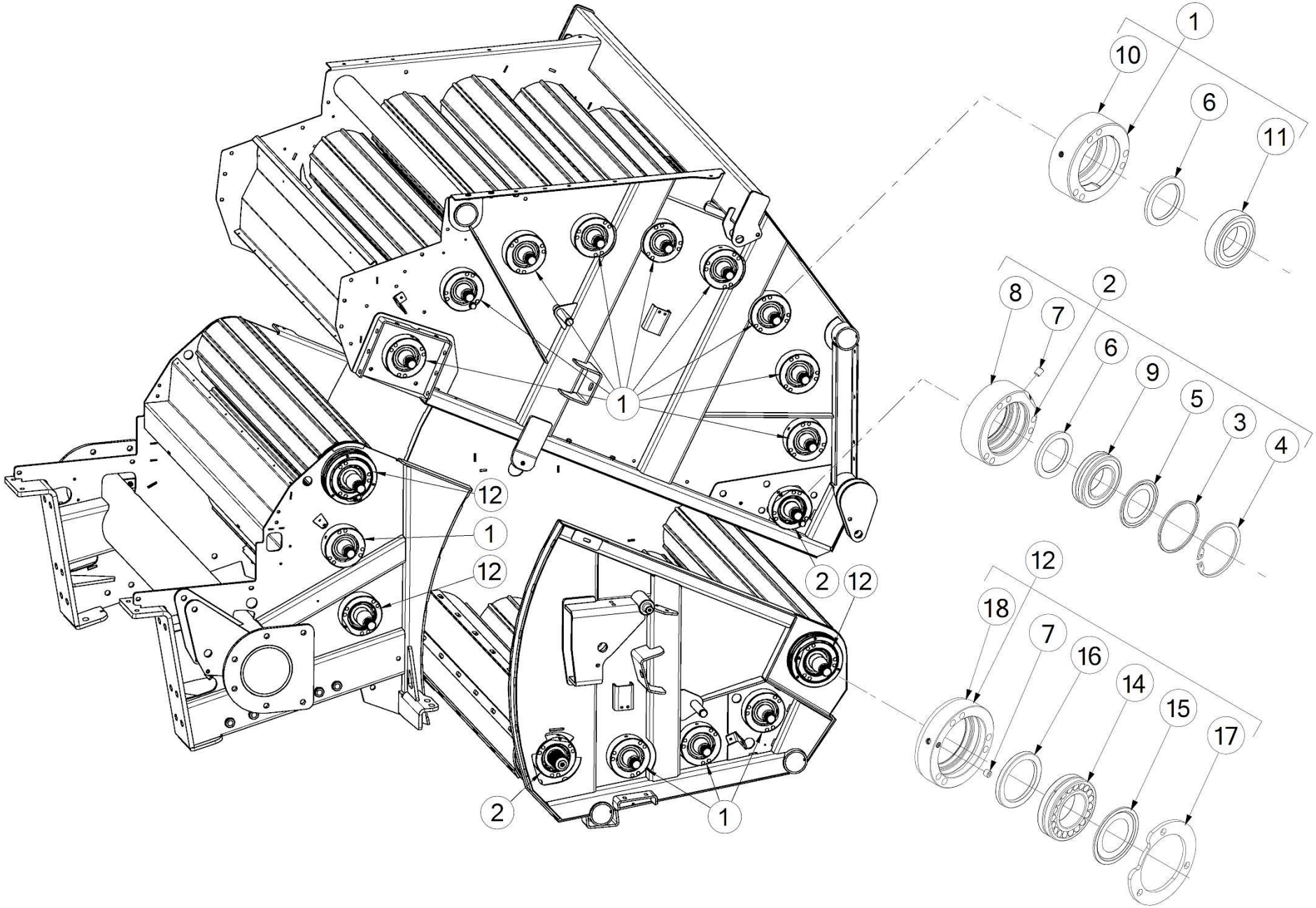

No.	Part No	Description	Qty
1	ART00293	BEARING ROLLER COMP ASSY	13
2	ART00051	BEARING ROLLER COMP ASSY	2
3	CZC02063	3MML BEARING RETAINING RING	1
4	CFA00452	CIRCLIP 95MM INTERNAL	1
5	CBR00061	NILOS-RING 6210AV	1
6	CSE00099	SEAL OIL 58X80X8	1
7	CFA00559	GRUBSCREW M10X8	1
8	CMH00511	BUSH 90X135X46 BEARING HOUSING	1
9	CBR00060	BEARING SPHERICAL SKF 2210CC	1
10	CMH00905	BUSH 90X135X46 BEARING HOUSING	1
11	CBR00083	BEARING 1726210-2RS RADIAL	1
12	ART00051 *UP TO SERIAL No 665119*	BEARING ROLLER COMP ASSY	3
12	ART00387 *FROM SERIAL No 665120*	BEARING HOUSING 22211 COMP	3
14	CBR00060 *UP TO SERIAL No 665119*	BEARING SPHERICAL SKF 2210CC	1
14	CBR00355 *FROM SERIAL No 665120*	BEARING 22211 SPHERICAL ROLLER	1
15	CBR00061 *UP TO SERIAL No 665119*	NILOS-RING 6210AV	1
15	CBR00356 *FROM SERIAL No 665120*	NILOS-RING 2211AV	1
16	CSE00099 *UP TO SERIAL No 665119*	SEAL OIL 58X80X8	1
16	CSE00657 *FROM SERIAL No 665120*	SEAL 68X90X8	1
17	CZC02063 *UP TO SERIAL No 665119*	3MML BEARING RETAINING RING	1
17	CFA00452 *UP TO SERIAL No 665119*	CIRCLIP 95MM INTERNAL	1
17	CZF00334 *FROM SERIAL No 665120*	6MM L BEARING RETAINER RING	1
18	CMH00511 *UP TO SERIAL No 665119*	BUSH 90X135X46 BEARING HOUSING	1
18	CMH01853 *FROM SERIAL No 665120*	BUSH 100X135X38 BEARING HOUSING	1

No.	Part No	Description	Qty

NRF Netter unit 1 [Up to Serial No 659743] (827)

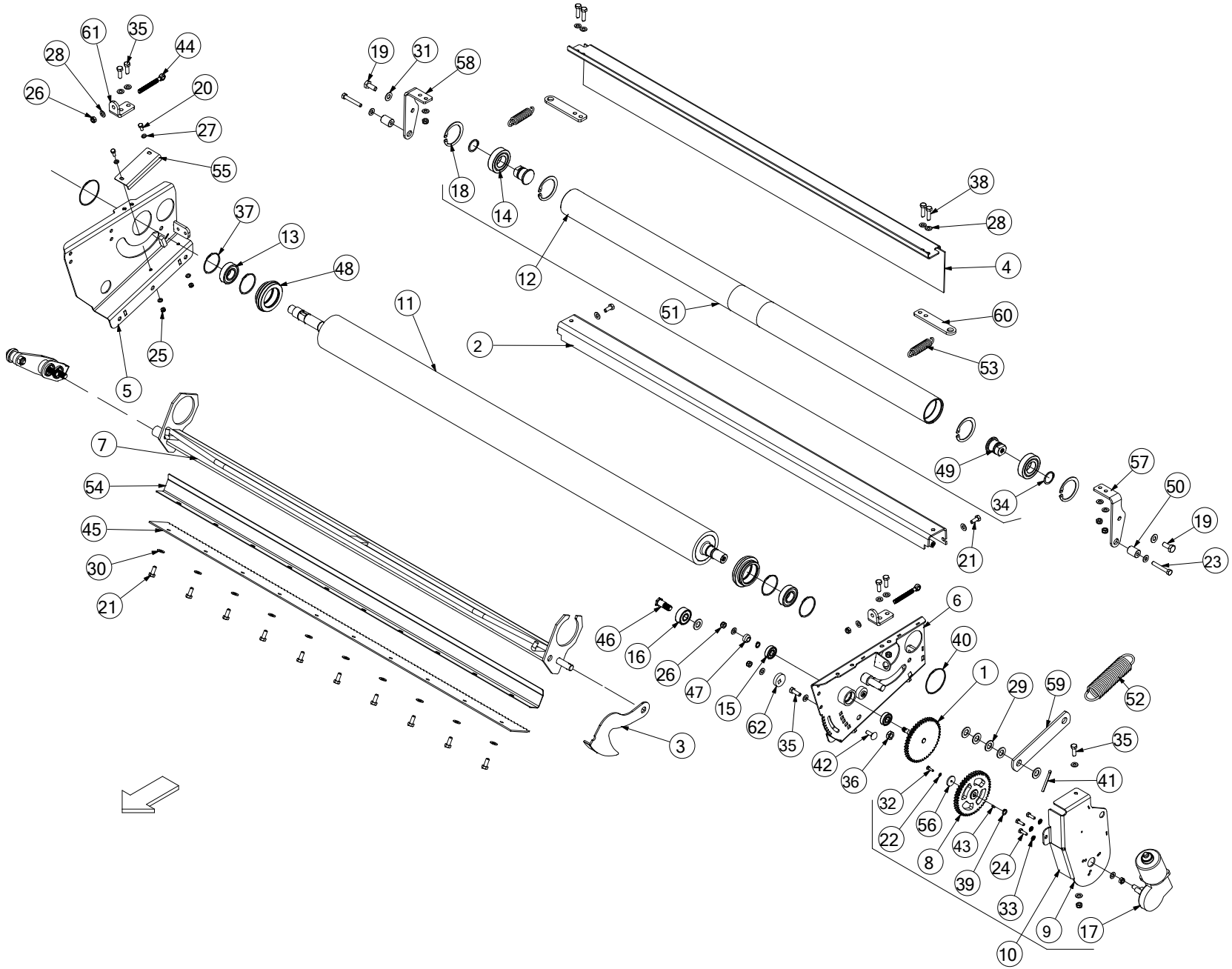

No.	Part No	Description	Qty
1	ACH00279	PLATEWHEEL ASSY. NET UNIT	1
2	ACH00282	SMALL NET ROLLER GUARD	1
3	ACH00369	NET RELEASE UNIT ASSY.	1
4	ACH00997	NETTER ROLLER COVER ASSY	1
5	ACH01140	NET UNIT (RIGHT) WELD ASSY.	1
6	ACH01141	NET UNIT (LEFT) WELD ASSY.	1
7	ACH01145	KNIFE HOLDER WELD ASSY	1
8	ALA00290	SPROCKET ASSY F560 NET MOTOR	1
9	ALA00507	NET MOTOR WELD ASSY FUSION 2	1
10	ALA00508	MOTOR ASSY NET UNIT FUSION 2	1
INCLUDES ITEMS 8, 9, 17, 22, 24, 32, 33, 39, 43 & 56			
11	KST00073	KIT RUBBER ROLLER REPLACEMENT (FUSION PLUS)	1
THIS KIT INCLUDES ARC00267 RUBBER ROLLER & 2xBEARINGS (ANT00079) & ITEM 51 KNURL ROLLER (CMH01707)			
12	ARC00393	TAPER ROLLER NETTER BACK KNURL	1
INCLUDES ITEMS 14, 18, 34, 49 & 51 (REPLACES ARC00336)			
13	CBR00009	BEARING 6205 2RS	2
14	CBR00024	BEARING 62062RS	2
15	CBR00067	BEARING 6201	2
16	CBR00081	BEARING CAM INA LR 5202 NPPU	1
REPLACES CBR00273			
17	CEL00648	MOTOR NET UNIT F560	1
18	CFA00002	CIRCLIP 62MM INTERNAL	4
19	CFA00024	SETSCREW M10X25 Z/P	2
20	CFA00045	SETSCREW M6X16	4
21	CFA00052	SETSCREW M8X20 Z/P	12
22	CFA00083	WASHER FLAT 4MM Z/P	1
23	CFA00108	BOLT M8X55 Z/P	2
24	CFA00115	SETSCREW M6X20 Z/P	3
25	CFA00131	NUT M6 NYLOC	7
26	CFA00132	NUT M8 NYLOC Z/P	16
27	CFA00144	WASHER FLAT 6MM Z/P	14
28	CFA00147	WASHER FLAT 8MM Z/P	28
29	CFA00222	WASHER FLAT 14MM Z/P	6
30	CFA00249	WASHER SKM8	15
31	CFA00251	WASHER SKM10	2
32	CFA00391	SETSCREW M4X16 Z/P	1
33	CFA00396	WASHER SPRING M6 Z/P	3
34	CFA00402	CIRCLIP 30MM EXTERNAL	2
35	CFA00407	BOLT M8X25 Z/P	8
36	CFA00446	NUT M12 HEXAGON LOCK/HALF NUT	1
37	CFA00461	CIRCLIP 52MM INTERNAL	4
38	CFA00491	SETSCREW M8X30 Z/P	5
39	CFA00499	CIRCLIP 10MM EXTERNAL	2
40	CFA00501	CIRCLIP 65MM EXTERNAL	2
41	CFA00556	SPLIT PIN 6X50 Z/P	1
42	CFA00591	BOLT M8X25 CUP SQ Z/P	1
43	CFA00789	KEY WOODRUFF 3 X 3.7	1
44	CFA00887	EYE BOLT M8X80	2
45	CKN00013	KNIFE FOR NET UNIT VERSION 2	1

No.	Part No	Description	Qty
46	CMH00672	BOLT SHOULDER 3/4" H	1
47	CMH00705	BUSH 10X25X10 NYLON	1
48	CMH00786	BUSH 52X80X25 STEPPED&CIRCLIP	2
REPLACED BY ANT00079 (BEARING ITEM 13 INCLUDED IN MOULDED ASSEMBLY)			
49	CMH01253	SHAFT STUB FOR ARC00205	2
50	CMH01443	BUSH 8X20X26 Z/P	2
51	CMH01707	ROLLER NETTER 70X60X1260 KNURL	1
REPLACES CMH01498			
52	CSG00017	SPRING EXT 4.47X40.6X176X26	1
53	CSG00231	SPRING EXT 3.66X20X80X15 B/C	2
54	CZB00242	1.5MM L KNIFE GUARD PEICE	1
55	CZB02414	1.5MM L NET UNIT PART FUSION 2	2
56	CZC03292	3MM L SPROCKET RETAINER WASHER Z/P	1
57	CZE00210	5MM L NET UNIT BACK ROLLER BRCKT	1
ALSO ORDER MATCHING BRACKET CZE00211 (ITEM 58)			
58	CZE00211	5MM L NET UNIT BACK ROLLER BRCKT	1
ALSO ORDER MATCHING BRACKET CZE00210 (ITEM 57)			
59	ANT00134	NET KNIFE PULL LINK ASSY	1
REPLACES CZF02655			
60	CZF05676	6MM L NET UNIT PART	2
61	CZF05677	6MM L SPRING BRACKET NET UNIT	2
62	CZG02073	8MM L NET UNIT PART	1

NRF Netter unit 1 [From Serial No 659744] (973)

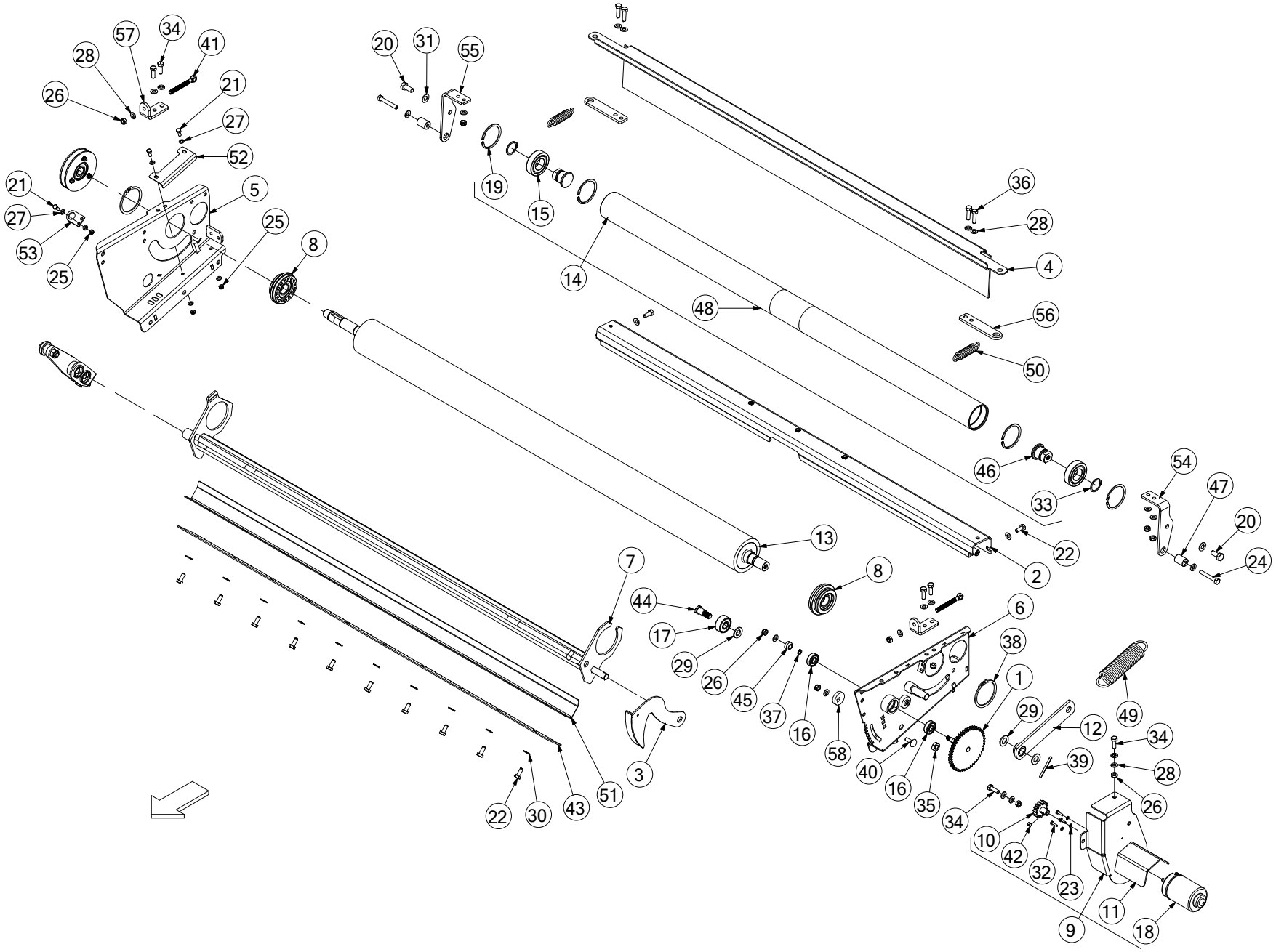

No.	Part No	Description	Qty
1	ACH00279	PLATEWHEEL ASSY. NET UNIT	1
2	ACH00282	SMALL NET ROLLER GUARD	1
3	ACH00369	NET RELEASE UNIT ASSY.	1
4	ACH00997	NETTER ROLLER COVER ASSY	1
5	ACH01140	NET UNIT (RIGHT) WELD ASSY.	1
6	ACH01141	NET UNIT (LEFT) WELD ASSY.	1
7	ACH01145	KNIFE HOLDER WELD ASSY	1
8	ANT00079	NET KNIFE PIVOT BUSH C/W BEARING	2
9	ANT00117	MOTOR ASSY NET UNIT F3 PLUS	1
INCLUDES ITEMS 10, 11, 18, 23, 32 & 42			
10	ANT00139	10T MOD 2.5 SPUR GEAR NETTER	1
REPLACES ANT00118 (15T GEAR)			
11	ANT00120	NETCUT MOTOR MOUNTING BRACKET	1
12	ANT00134	NET KNIFE PULL LINK ASSY	1
13	KST00073	KIT RUBBER ROLLER REPLACEMENT (FUSION PLUS)	1
THIS KIT INCLUDES RUBBER ROLLER (ARC00267) & 2xBEARINGS (ANT00079) & ITEM 48 KNURL ROLLER (CMH01707)			
14	ARC00393	TAPER ROLLER NETTER BACK KNURL	1
INCLUDES ITEMS 15, 19, 33, 46 & 48 (REPLACES ARC00336)			
15	CBR00024	BEARING 62062RS	2
16	CBR00067	BEARING 6201	2
17	CBR00081	BEARING CAM INA LR 5202 NPPU	1
REPLACES CBR00273			
18	CEL00991	MOTOR 12VOLT 2000RPM	1
19	CFA00002	CIRCLIP 62MM INTERNAL DIN 472	4
20	CFA00024	SETSCREW M10X25 Z/P	2
21	CFA00045	SETSCREW M6X16	6
22	CFA00052	SETSCREW M8X20 Z/P	12
23	CFA00083	WASHER FLAT 4MM Z/P	3
24	CFA00108	BOLT M8X55 Z/P	2
25	CFA00131	NUT M6 NYLOC	9
26	CFA00132	NUT M8 NYLOC Z/P	16
27	CFA00144	WASHER FLAT 6MM Z/P	18
28	CFA00147	WASHER FLAT 8MM Z/P	28
29	CFA00222	WASHER FLAT 14MM Z/P	3
30	CFA00249	WASHER SKM8	15
31	CFA00251	WASHER SKM10	2
32	CFA00391	SETSCREW M4X16 Z/P	3
33	CFA00402	CIRCLIP 30MM EXTERNAL	2
34	CFA00407	BOLT M8X25 Z/P	8
35	CFA00446	NUT M12 HEXAGON LOCK/HALF NUT	1
36	CFA00491	SETSCREW M8X30 Z/P	5
37	CFA00499	CIRCLIP 10MM EXTERNAL	1
38	CFA00501	CIRCLIP 65MM EXTERNAL	2
39	CFA00556	SPLIT PIN 6X50 Z/P	1
40	CFA00591	BOLT M8X25 CUP SQ Z/P	1
41	CFA00887	EYE BOLT M8X80	2
42	CFA01119	GRUBSCREW M5X6MM	2
REPLACES CFA02329 (M4X6MM)			
43	CKN00013	KNIFE FOR NET UNIT VERSION 2	1
44	CMH00672	BOLT SHOULDER 3/4" H	1

No.	Part No	Description	Qty
45	CMH00705	BUSH 10X25X10 NYLON	1
46	CMH01253	SHAFT STUB FOR ARC00205	2
47	CMH01443	BUSH 8X20X26 Z/P	2
48	CMH01707	ROLLER NETTER 70X60X1260 KNURL	1
REPLACES CMH01498			
49	CSG00017	SPRING EXT 4.47X40.6X176X26	1
50	CSG00231	SPRING EXT 3.66X20X80X15 B/C	2
51	CZB00242	1.5MM L KNIFE GUARD PEICE	1
52	CZB02414	1.5MM L NET UNIT PART FUSION 2	2
53	CZC04877	3MM PROXIMITY SENSOR BOLT ON BRKT	1
54	CZE00210	5MM L NET UNIT BACK ROLLER BRCKT	1
ALSO ORDER MATCHING BRACKET CZE00211 (ITEM 55)			
55	CZE00211	5MM L NET UNIT BACK ROLLER BRCKT	1
ALSO ORDER MATCHING BRACKET CZE00210 (ITEM 54)			
56	CZF05676	6MM L NET UNIT PART	2
57	CZF05677	6MM L SPRING BRACKET NET UNIT	2
58	CZG02073	8MM L NET UNIT PART	1

NRF Netter unit 2 [Up to Serial No 657406] (828)

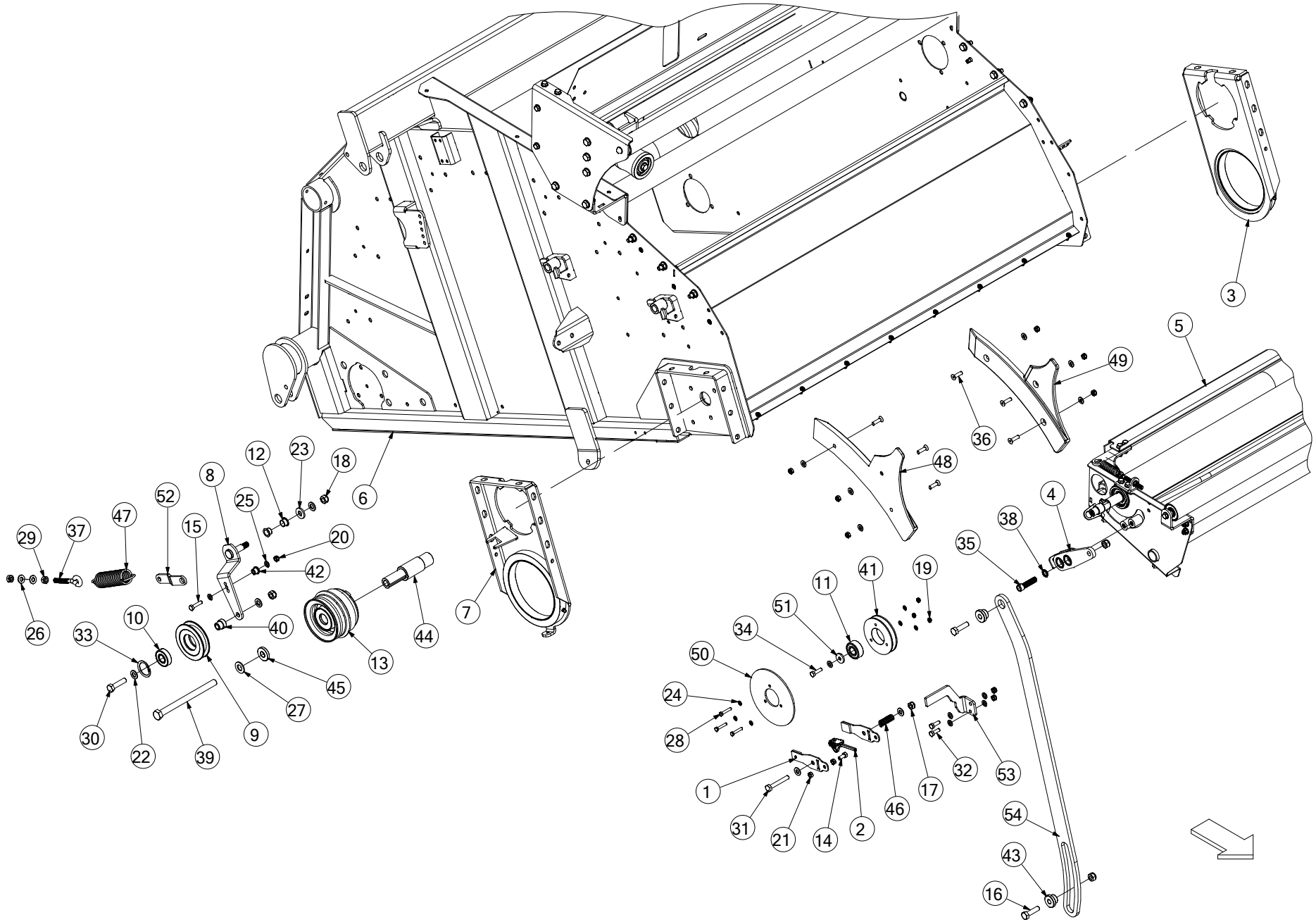

No.	Part No	Description	Qty
1	ABS00023	BRAKE PAD KIT NET BRAKE RELEASE	1
KIT INCLUDES A SET OF 2 BRAKE PADS			
2	ABS00021	NET BRAKE RELEASE HANDLE	1
3	ACH00170	HINGE ASSY BALER DOOR	1
4	ACH00868	NET KNIFE RESET ARM FUSION	1
USED ON FUSION 3 UP TO SERIAL No 665656 & USED ON FUSION 3 PLUS UP TO SERIAL No 665159			
4	ACH01709	HYDRAULIC NET KNIFE RESET BRACKET	1
USED ON FUSION 3 FROM SERIAL No 665657 & USED ON FUSION 3 PLUS FROM SERIAL No 665160			
5	ACH01142	NET UNIT FUSION FILM STRETCH	1
6	ACH01204	TOP DOOR WELD ASSY FUSION NRF	1
UP TO SERIAL NO. 656740 (USED ON NRF MACHINES ONLY)			
6	ACH01336	TOP DOOR WELD ASSY FUSION NRF	1
FROM SERIAL NO. 656741 (USED ON NRF MACHINES ONLY)			
7	ACH01228	HINGE FUSION 2 BARREL WRAP	1
USED ON NRF MACHINES ONLY			
8	ALA00483	BELT TENSION WELD ASSY	1
9	ANT00004	PULLEY WHEEL BELT TENSIONER ASSY	1
INCLUDES BEARING & CIRCLIP (ITEMS 10 & 33)			
10	CBR00020	BEARING 6204 2RS	1
11	CBR00084	BEARING SEALED SPRAG CLUTCH	1
12	CBR00118	BEARING STEPPED PLAS 16X18X12	2
13	CEL00259	MAGNETIC CLUTCH UNIT 12V	1
14	CFA00052	SETSCREW M8X20 Z/P	3
15	CFA00055	BOLT M8X35 Z/P	1
16	CFA00079	BOLT M12X45	2
17	CFA00123	NUT M10 NYLOC	5
18	CFA00124	NUT M12 NYLOC	4
19	CFA00131	NUT M6 NYLOC	7
20	CFA00132	NUT M8 NYLOC Z/P	12
21	CFA00133	NUT M8 Z/P	2
22	CFA00138	WASHER FLAT 12MM Z/P	3
23	CFA00139	WASHER FLAT 12MM H/D Z/P	1
24	CFA00144	WASHER FLAT 6MM Z/P	8
25	CFA00147	WASHER FLAT 8MM Z/P	12
26	CFA00201	WASHER FLAT 10 MM Z/P	6
27	CFA00252	WASHER SKM16	1
28	CFA00253	SETSCREW M6X35 Z/P	3
29	CFA00256	NUT M10 Z/P	2
30	CFA00272	BOLT M12X50 Z/P	1
31	CFA00383	BOLT M10X70 Z/P	1
32	CFA00407	BOLT M8X25 Z/P	8
33	CFA00458	CIRCLIP 72MM INTERNAL DIN472	1
34	CFA00491	SETSCREW M8X30 Z/P	5
35	CFA00557	BOLT M12X50 SOC CAP ZP	2
36	CFA00593	SETSCREW M8X30 CSK ZP	6
37	CFA00773	BOLT EYE M10X95	1
38	CFA00799	WASHER M12 NORDLOC	2
39	CFA00955	BOLT M16X210 Z/P	1
40	CMH00261	BEARING HOLDER CONCENTRIC Z/P	1
41	ANT00145	NET PULLEY WHEEL PITCH DIA 100 ASSEM	1

No.	Part No	Description	Qty
COMPLETE WITH SPRAG BEARING ITEM 11 (REPLACES CMH00596 PULLEY ONLY)			
42	CMH00742	BUSH 8X20X13 ZINC PLATED	1
43	CMH00771	BUSH 12X35 STEPPED	2
44	CMH01394	SHAFT 40X140 STEPPED	1
45	CMH02206	WASHER MACHINED ST BALER	1
46	CSG00058	SPRING COMP 2.34WDX15ODX8.5 T/C	1
47	CSG00229	SPRING EXT 4.88X40.8X176X24	1
48	CTP00749	WEAR PLATE RH TOP DOOR FUSION	1
49	CTP00750	WEAR PLATE LH TOP DOOR FUSION	1
50	CZD02527	4MM L NET BRAKE RELEASE PART	1
51	CZD02678	4MM L WASHER PART NET UNIT	1
52	CZF04593	6MM L BELT TENSIONER PART	1
53	CZF05972	6MM L BRAKE PART NET BRAKE	1
54	CZH03704	10MM L RESET ARM FUSION 3	1

NRF Netter unit 2 [from Serial No 657407] (893)

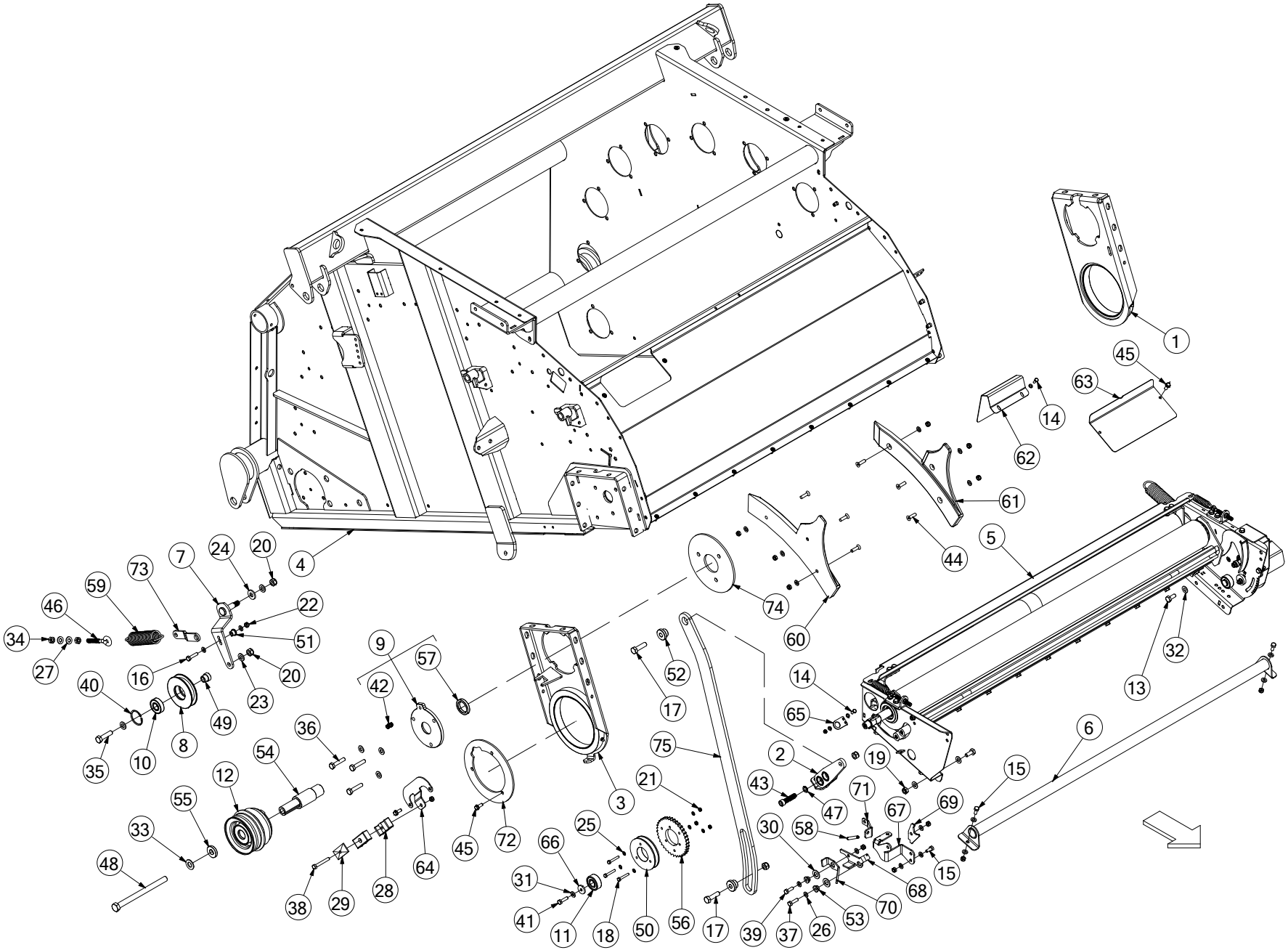

No.	Part No	Description	Qty
1	ACH00170	HINGE ASSY BALER DOOR	1
2	ACH00868	NET KNIFE RESET ARM FUSION	1
USED ON FUSION 3 UP TO SERIAL No 665656 & USED ON FUSION 3 PLUS UP TO SERIAL No 665159			
2	ACH01709	HYDRAULIC NET KNIFE RESET BRACKET	1
USED ON FUSION 3 FROM SERIAL No 665657 & USED ON FUSION 3 PLUS FROM SERIAL No 665160			
3	ACH01228	HINGE FUSION 2 BARREL WRAP	1
4	ACH01336	TOP DOOR WELD ASSY FUSION NRF	1
5	ACH01400	NET UNIT FUS 3 PLUS FILM STRETCH	1
6	ADP00313	SPREADER BAR FUSION 3	1
7	ALA00483	BELT TENSION WELD ASSY	1
8	ANT00004	PULLEY WHEEL BELT TENSIONER ASSY	1
INCLUDES BEARING & CIRCLIP (ITEMS 10 & 40)			
9	ARC00150	SEAL PLATE ASSY NET CLUTCH	1
INCLUDES ITEMS 42 & 57			
10	CBR00020	BEARING 6204 2RS	1
11	CBR00084	BEARING SEALED SPRAG CLUTCH	1
12	CEL00259	SHAFT MOUNTED	1
13	CFA00024	SETSCREW M10X25 Z/P	5
14	CFA00045	SETSCREW M6X16	8
15	CFA00052	SETSCREW M8X20 Z/P	10
16	CFA00055	BOLT M8X35 Z/P	1
17	CFA00079	BOLT M12X45	2
18	CFA00099	SETSCREW M6X40 Z/P	3
19	CFA00123	NUT M10 NYLOC	5
20	CFA00124	NUT M12 NYLOC	4
21	CFA00131	NUT M6 NYLOC	11
22	CFA00132	NUT M8 NYLOC Z/P	28
23	CFA00138	WASHER FLAT 12MM Z/P	3
24	CFA00139	WASHER FLAT 12MM H/D Z/P	1
25	CFA00144	WASHER FLAT 6MM Z/P	25
26	CFA00147	WASHER FLAT 8MM Z/P	44
27	CFA00201	WASHER FLAT 10 MM Z/P	2
28	CFA00203	20MM HOSE CLAMP	2
29	CFA00204	HOSE CLAMP COVER PLATE 20-25	1
30	CFA00222	WASHER FLAT 14MM Z/P	5
31	CFA00249	WASHER SKM8	5
32	CFA00251	WASHER SKM10	14
33	CFA00252	WASHER SKM16	1
34	CFA00256	NUT M10 Z/P	2
35	CFA00272	BOLT M12X50 Z/P	1
36	CFA00310	BOLT M10X50 Z/P	3
37	CFA00316	BOLT M8X30 Z/P	1
38	CFA00340	BOLT M8X60 Z/P	1
39	CFA00407	BOLT M8X25 Z/P	7
40	CFA00458	CIRCLIP 52MM INTERNAL DIN 472	1
41	CFA00491	SETSCREW M8X30 Z/P	1
42	CFA00549	GREASE FITTING 6MM X 1/8 M/M	1
43	CFA00557	BOLT M12X50 SOC CAP ZP	2
44	CFA00593	SETSCREW M8X30 CSK ZP	6

No.	Part No	Description	Qty
45	CFA00766	SETSCREW M8X20 FLANGED DIN6921 Z/P	5
46	CFA00773	BOLT EYE M10X95	1
47	CFA00799	WASHER M12 NORDLOC	2
48	CFA00955	BOLT M16X210 Z/P	1
49	CMH00261	BEARING HOLDER CONCENTRIC Z/P	1
50	ANT00092	NET PULLEY WHEEL PITCH DIA 100 ASSEM	1
COMPLETE WITH SPRAG BEARING ITEM 11 (REPLACES ANT00145) ALSO ORDER SPACER CMH01872			
50a	CMH01872	SPACER 76X105X24	1
51	CMH00742	BUSH 8X20X13 ZINC PLATED	1
52	CMH00771	BUSH 12X35 STEPPED	2
53	CMH00871	BUSH 8X20X7 ZP	2
54	CMH01394	SHAFT 40X140 STEPPED	1
55	CMH02206	WASHER 16X38X10 STEPPED Z/P	1
56	CPL00237	10MM DISK RATCHET BRAKE	1
57	CSE00098	SEAL RADIAL SHAFT SEAL 35 X 50 X 8	1
58	CSG00047	SPRING EXT 1.2X8.5X59	1
59	CSG00229	SPRING EXT 4.88X40.8X176X24	1
60	CTP00749	WEAR PLATE RH TOP DOOR FUSION	1
61	CTP00750	WEAR PLATE LH TOP DOOR FUSION	1
62	CZB00311	1.5MM FILM GUIDE PLATE FUSION 3	1
63	CZB02530	1.5MM COVER PLATE NRF SENSOR	1
UP TO SERIAL No 659756			
63	CZB04538	1.5MM COVER PLATE NRF SENSOR	1
FROM SERIAL No 659757			
64	CZC02567	3MM HOSE BRACKET FUSION 3 PLUS	1
65	CZC04877	3MM PROXIMITY SENSOR BOLT ON BRKT	1
66	CZD02678	4MM L WASHER PART NET UNIT	1
67	CZD02905	4MM RATCHET BRAKE PART	1
68	CZD02908	4MM RATCHET PART BRAKE UNIT	1
69	CZD02912	4MM STOP BRACKET RATCHET BRAKE	1
70	CZD03015	RATCHET BRAKE RELEASE LEVER NETTER	1
71	CZD03025	4MM RATCHET BRAKE SUPPORT PLATE	1
72	CZE00131	5MM L BALER DOOR HINGE PART	1
73	CZF04593	6MM L BELT TENSIONER PART	1
74	CZF04758	3MM L ROLLER SPACER	1
75	CZH03704	10MM L RESET ARM FUSION 3	1

Film gathering unit (826)

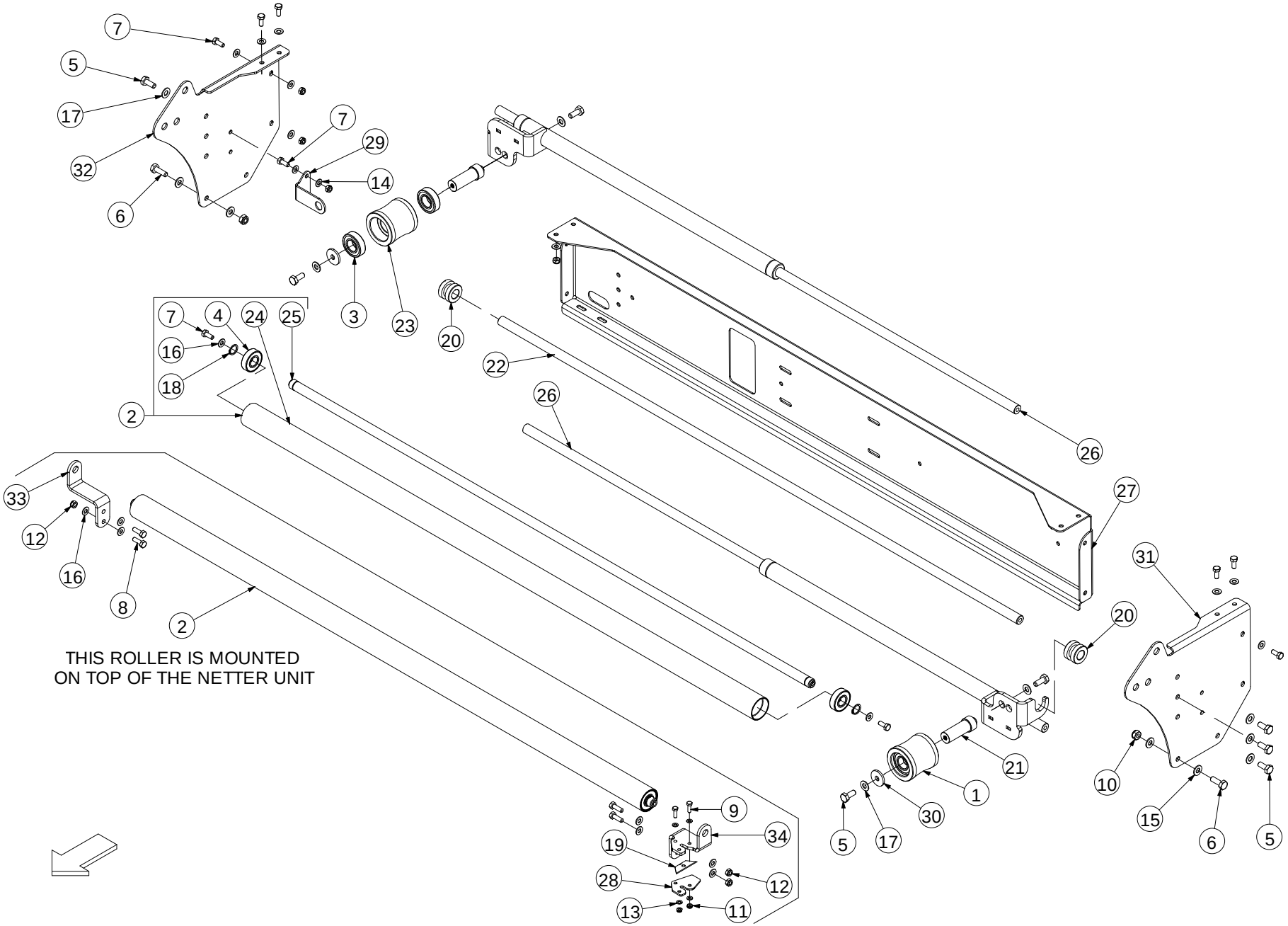

No.	Part No	Description	Qty
1	ARC00250	ROLLER ASSY FILM GATHERING	2
INCLUDES BEARINGS ITEMS 3 & 23			
2	ARC00263	ROLLER ASSY FILM STRETCH FUSION	2
INCLUDES ITEMS 4, 7, 16, 18, 24 & 25			
3	CBR00009	BEARING 6205 2RS	4
4	CBR00020	BEARING 6204 2RS	4
5	CFA00024	SETSCREW M10X25 Z/P	10
6	CFA00025	SETSCREW M10X30	4
7	CFA00052	SETSCREW M8X20 Z/P	12
8	CFA00102	SETSCREW M8X25 Z/P	4
9	CFA00115	SETSCREW M6X20 Z/P	3
10	CFA00123	NUT M10 NYLOC	4
11	CFA00131	NUT M6 NYLOC	3
12	CFA00132	NUT M8 NYLOC Z/P	14
13	CFA00144	WASHER FLAT 6MM Z/P	6
14	CFA00147	WASHER FLAT 8MM Z/P	4
15	CFA00201	WASHER FLAT 10 MM Z/P	8
16	CFA00249	WASHER SKM8	26
17	CFA00251	WASHER SKM10	10
18	CFA00339	CIRCLIP 20MM EXTERNAL	4
19	CKN00011	KNIFE CUT&HOLD STANLEY BLADE	1
20	CMH00325	BUSH STEPPED 20X40X30 NYLON	2
21	CMH01153	PIN 30X85 MACHINED	2
22	CMH01249	CHROME BAR 20X1450	1
23	CMH01710	ROLLER FILM GATHERING UNIT	2
REPLACES CMH01366			
24	CMH01392	MACHINED TUBE FILM STRETCH	2
25	CMH01393	SHAFT 20X1507 THREADED	2
26	CRA00615	RAM FILM GATHERING	2
26a	CSE00636	SEAL KIT RAM FOR RAM CRA00615	1
SEAL KIT FOR RAM CRA00615			
27	CZC03587	3MM L FILM GATHERING UNIT PART	1
28	CZC03780	3MM BLADE GUARD FUSION 3 PLUS	1
29	CZC03918	3MM SENSOR BRACKET FUSION 3 NRF	1
30	CZD02776	WASHER 10X35X4	2
31	CZD02793	4MM L FILM GATHERING UNIT PART	1
32	CZD02794	4MM L FILM GATHERING UNIT PART	1
33	CZF06237	6MM L ROLLER BRACKET FUSION 2	1
34	CZF06845	6MM L KNIFE BRACKET FUSION 3	1

No.	Part No	Description	Qty

Film stretch unit (825)

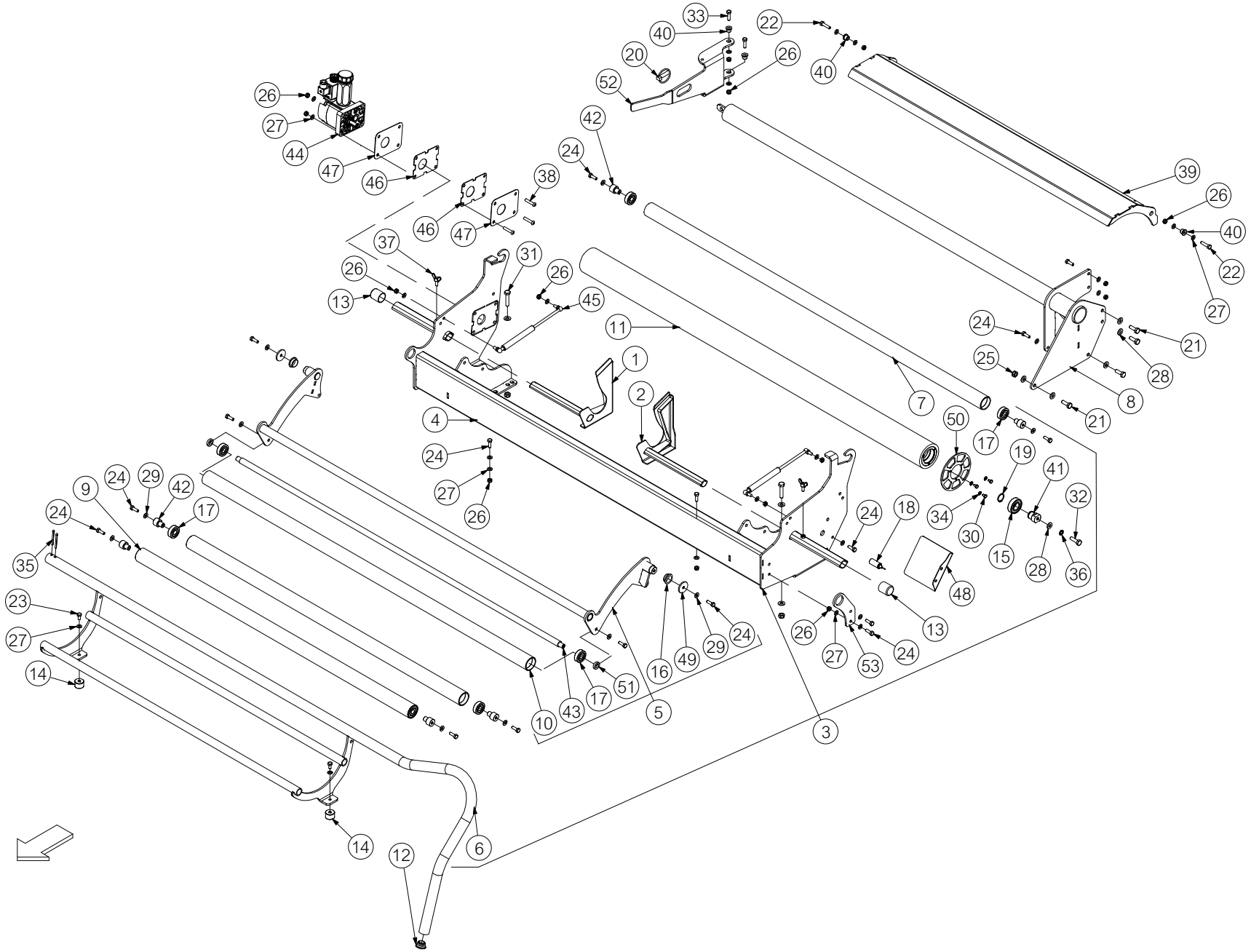

No.	Part No	Description	Qty
1	ADP00277	ROLL GUIDE ASSY RIGHT	1
2	ADP00278	ROLL GUIDE ASSY LEFT	1
3	ADP00283	FILM STRETCH ASSY FUSION 3 *COMPLETE ASM EXCLUDING ITEMS 8, 39 & 52*	1
4	ADP00284	FILM STRETCH UNIT WELD ASSY	1
5	ADP00285	ROLL BRAKE BAR ASSY FUSION 3 *INCLUDES ITEMS 10, 16, 17, 24, 29, 43, 49 & 51*	1
6	ALA00828	NET ROLL LOADING CRADLE ASSY *ALSO ORDER CRADLE HINGE PART CZF07790 FOR MACHINES PRIOR TO SERIAL No 662796*	1
7	ARC00261	ROLLER IDLE FILM STRETCH *INCLUDES BEARINGS (CBR00283)*	1
8	ARC00289	SPARE NET ROLL HOLDER FUSION	1
9	ARC00331	ROLLER IDLE FILM STRETCH *INCLUDES BEARINGS (CBR00283)*	2
10	ARC00337	ROLLER IDLE FILM STRETCH *INCLUDES BEARINGS (CBR00283)*	1
11	ARC00366	ROLLER RUBBER 1600 F3 PLUS *DIRECT REPLACEMENT FOR ARC00251 WHICH CAN ALSO BE USED INSTEAD*	1
12	CBC00010	CAP PLASTIC INSERT 1"	1
13	CBC00026	CAP 34.9 X 38.1 FLEXI CAP BLACK	2
14	CBE00036	BUFFER 30X20XM8 I SHORE 43	2
15	CBR00009	BEARING 6205 2RS	1
16	CBR00269	BEARING 25X28X11 STEPPED PLAS	2
17	CBR00283	BEARING 6302 2RS	8
18	CEL00616	SENSOR ASSY PROXIMITY 18MM NPN	1
19	CFA00001	CIRCLIP 25MM EXTERNAL Z/P	1
20	CFA00005	LINCH PIN 10MM	1
21	CFA00025	SETSCREW M10X30	4
22	CFA00055	BOLT M8X35 Z/P	2
23	CFA00101	SETSCREW M8X16 Z/P	2
24	CFA00102	SETSCREW M8X25 Z/P	20
25	CFA00123	NUT M10 NYLOC	6
26	CFA00132	NUT M8 NYLOC Z/P	22
27	CFA00147	WASHER FLAT 8MM Z/P	36
28	CFA00201	WASHER FLAT 10 MM Z/P	13
29	CFA00249	WASHER SKM8	10
30	CFA00269	SETSCREW M6X10 Z/P	3
31	CFA00310	BOLT M10X50 Z/P	2
32	CFA00311	SETSCREW M10X35 Z/P	1
33	CFA00316	BOLT M8X30 Z/P	2
34	CFA00396	WASHER SPRING M6 Z/P	3
35	CFA00556	SPLIT PIN 6X50 Z/P	2
36	CFA00798	WASHER M10 NORDLOC	1
37	CFA00921	WING NUT M8X20 Z/P DIN316	2
38	CFA00926	SETSCREW M8X40 BUTTON HD Z/P	4
39	CGD00263	NET COVER ASSY BARREL WRAP	1
40	CMH00742	BUSH 8X20X13 ZINC PLATED	4
41	CMH01211	PIN 50X40 STEPPED 20	1
42	CMH01385	BUSH 25X35 STEPPED 15	6
43	CMH01500	SHAFT 20X1530	1

No.	Part No	Description	Qty
44	CMT00336	PUMP ASSY COMBINED RELEIF VALVE *FUSION 3 - REPLACES CMT00284*	1
44	CMT00199	PUMP ASSY COMBINED RELIEF VALVE *FUSION 2 - BARREL WRAP*	1
44a	CVA00408	VALVE PROP RELIEF CTE SAE10 NO *WILL FIT PUMP CMT00336 FROM SERIAL No 657529 ONWARDS*	1
44a	CVA00394	VALVE PROP RELIEF 12VOLT SIZE 08 *WILL FIT EITHER PUMP CMT00199 (FUSION 2) OR CMT00284 (FUSION 3) UP TO SERIAL No 657528*	1
44b	CVA00454	FILLER CAP STRETCH PUMP TMDV-1 *WILL FIT PUMP CMT00336 FROM SERIAL No 662524 ONWARDS*	1
44b	CVA00395	FILLER CAP STRETCHING PUMP F2+ *WILL FIT ALL PUMPS CMT00199 (FUSION 2) OR CMT00284 & CMT00336 (FUSION 3)) UP TO SERIAL No 662523*	1
44c	CFA01081	KEY 4X4X25 *WILL FIT ALL PUMPS CMT00199 (FUSION 2) OR CMT00284 & CMT00336 (FUSION 3)*	1
45	CRA00762	GAS STRUT 8X18X95 500NM *REPLACES CRA00262*	2
46	CZB02366	1.5MM L SPACER PART PUMP	2
47	CZB02367	1.5MM L FLANGE PLATE PART PUMP	2
48	CZB02420	1.5MM CHAIN GUARD PART	1
49	CZD02718	WASHER 8X40	2
50	CZD02789	4MM L ENCODER DISK FILM STRETCH	1
51	CZF06109	6MM WASHER 15X25X6	2
52	CZF06410	6MM FILM ROLL SUPPORT ARM FUSION 3	1
53	CZF07790	6MM FILM LOADING CRADLE HINGE PART	1

Transfer & front wrapping rollers (1000)

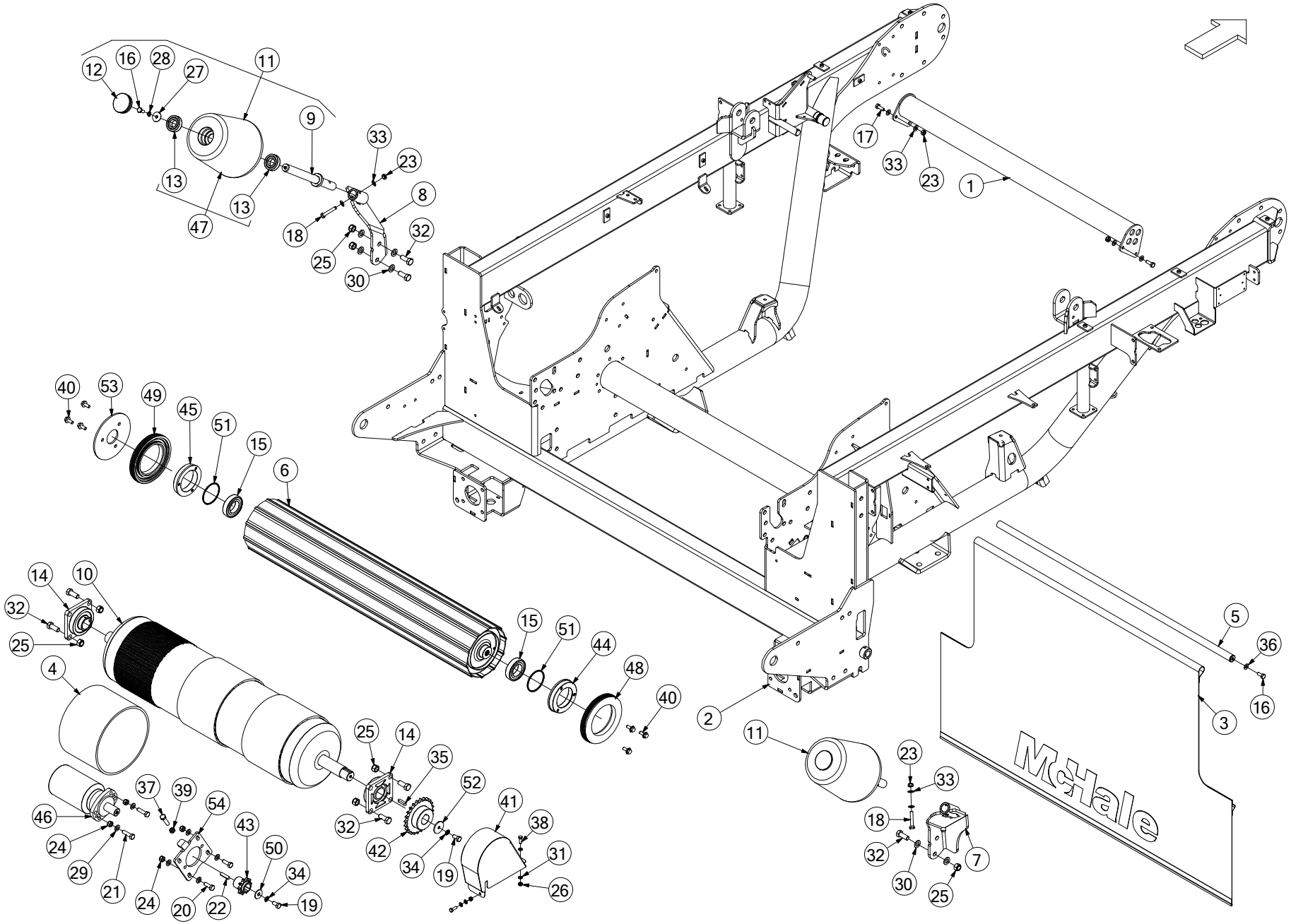

No.	Part No	Description	Qty
1	ACH00994	TRANSFER BEAM FUSION	1
USED ONLY WHERE TRANSFER ROLLER (ITEM 6) IS NOT FITTED			
2	ACH02819	CHASSIS FUSION 3 CT	1
3	AGD00065	DUST SHEET FUSION 3 CHASSIS	1
OPTIONAL FOR USE IN DRY DUSTY ENVIRONMENTS			
4	ALA00129	BELT KIT FOR FUSION	3
BELT REPAIR KIT FOR ITEM 10			
5	ALA00836	DUST SHEET HANGER FUSION 3	1
OPTIONAL FOR USE IN DRY DUSTY ENVIRONMENTS			
6	ARC00054	ROLLER BALE TRANSFER BALER	1
7	ARC00127	BOBBIN BRACKET LEFT FUSION	1
8	ARC00128	BOBBIN BRACKET RIGHT FUSION	1
9	ART00005	BOBBIN AXLE SHAFT	2
10	ART00317	FRONT FUSION ROLLER + BELTS COMPLETE	1
11	ART00350	BOBBIN ASSY FUSION 2	2
INCLUDES ITEMS 9, 12, 13, 16, 27, 28 & 47			
12	CBC00008	CAP PLASTIC INSERT 75MM	2
13	CBR00024	BEARING 62062RS	4
14	CBR00046	BEARING FLANGE UNIT SF 1 3/4	2
15	CBR00083	BEARING 1726210-2RS RADIAL	2
16	CFA00024	SETSCREW M10X25 Z/P	3
17	CFA00025	SETSCREW M10X30	4
18	CFA00026	BOLT M10X60	2
19	CFA00031	SETSCREW M12X25 Z/P	2
20	CFA00033	SETSCREW M12X35 Z/P	4
21	CFA00065	SETSCREW M12X45 Z/P	2
22	CFA00081	KEY 10X8X45	1
23	CFA00123	NUT M10 NYLOC	6
24	CFA00124	NUT M12 NYLOC	6
25	CFA00128	NUT M16 NYLOC	12
26	CFA00132	NUT M8 NYLOC Z/P	2
27	CFA00134	WASHER MUDWING M10X38MM OD	2
28	CFA00137	WASHER SPRING 10MM HD Z/P	2
29	CFA00138	WASHER FLAT 12MM Z/P	10
30	CFA00140	WASHER FLAT 16MM Z/P	8
31	CFA00147	WASHER FLAT 8MM Z/P	4
32	CFA00151	SETSCREW M16X40 Z/P	12
33	CFA00201	WASHER FLAT 10 MM Z/P	12
34	CFA00207	WASHER SPRING 12MM HD ZP	2
35	CFA00239	KEY 10X8X40	1
36	CFA00251	WASHER SKM10	1
37	CFA00270	SETSCREW M12X50 Z/P	1
38	CFA00407	BOLT M8X25 Z/P	2
39	CFA00446	NUT M12 HEXAGON LOCK/HALF NUT	1
40	CFA00520	SETSCREW M10X25 FLD ZP	6
41	CGD00104	GUARD WRAPPER DRIVE CHAIN	1
42	CMH00396	SPROCKET 3/4 PITCH 24T 40 DIA	1
43	CMH00749	SPROCKET 3/4 PITCH 10T 32 DIA	1
44	CMH00977	FLANGE 90X135X24 3 HOLE	1
USED UP TO SERIAL No 665062 - CAN BE REPLACED BY ARC00446 (METAL SEAL) IN THIS LOCATION ONLY			

No.	Part No	Description	Qty
45	CMH01187	FLANGE 90X130X24 3 HOLE	1
USED UP TO SERIAL No 665062 - CAN BE REPLACED BY ARC00446 (METAL SEAL) IN THIS LOCATION ONLY			
46	CMT00064	MOTOR 625CC SIDE PORT 32SHAFT	1
USE SEAL KIT CSE00110 FOR THIS MOTOR			
47	CPL00008	BOBBIN ASSEMBLEY	2
INCLUDES BEARINGS			
48	CPL00052	NYLON SEAL ROLLER DRIVE SIDE	1
USED UP TO SERIAL No 665062 - CAN BE REPLACED BY ARC00446 (METAL SEAL) IN THIS LOCATION ONLY			
48	ARC00446	SPUN ROLLER SEAL MOVING ROLLER	1
METAL SEAL - CAN BE USED TO REPLACE CPL00052 (NYLON SEAL) & CMH00977 (ITEM 44) IN THIS LOCATION ONLY			
49	CPL00053	NYLON SEAL ROLLER NON DRIVE SIDE	1
USED UP TO SERIAL No 665062 - CAN BE REPLACED BY ARC00446 (METAL SEAL) IN THIS LOCATION ONLY			
49	ARC00446	SPUN ROLLER SEAL MOVING ROLLER	1
METAL SEAL - CAN BE USED TO REPLACE CPL00053 (NYLON SEAL) & CMH00977 (ITEM 45) IN THIS LOCATION ONLY			
50	CZC02058	3MM L WASHER 38 X 12.5 X 3	1
51	CZC02063	3MM L BEARING RETAINER RING	2
52	CZD00121	4MM L CUT & TIE SPACER Z/P	1
53	CZF04758	3MM L ROLLER SPACER	1
54	CZG02687	8MM L MOTOR PLATE PART	1
REPLACES CZG02077			

Rear wrapping cradle (954)

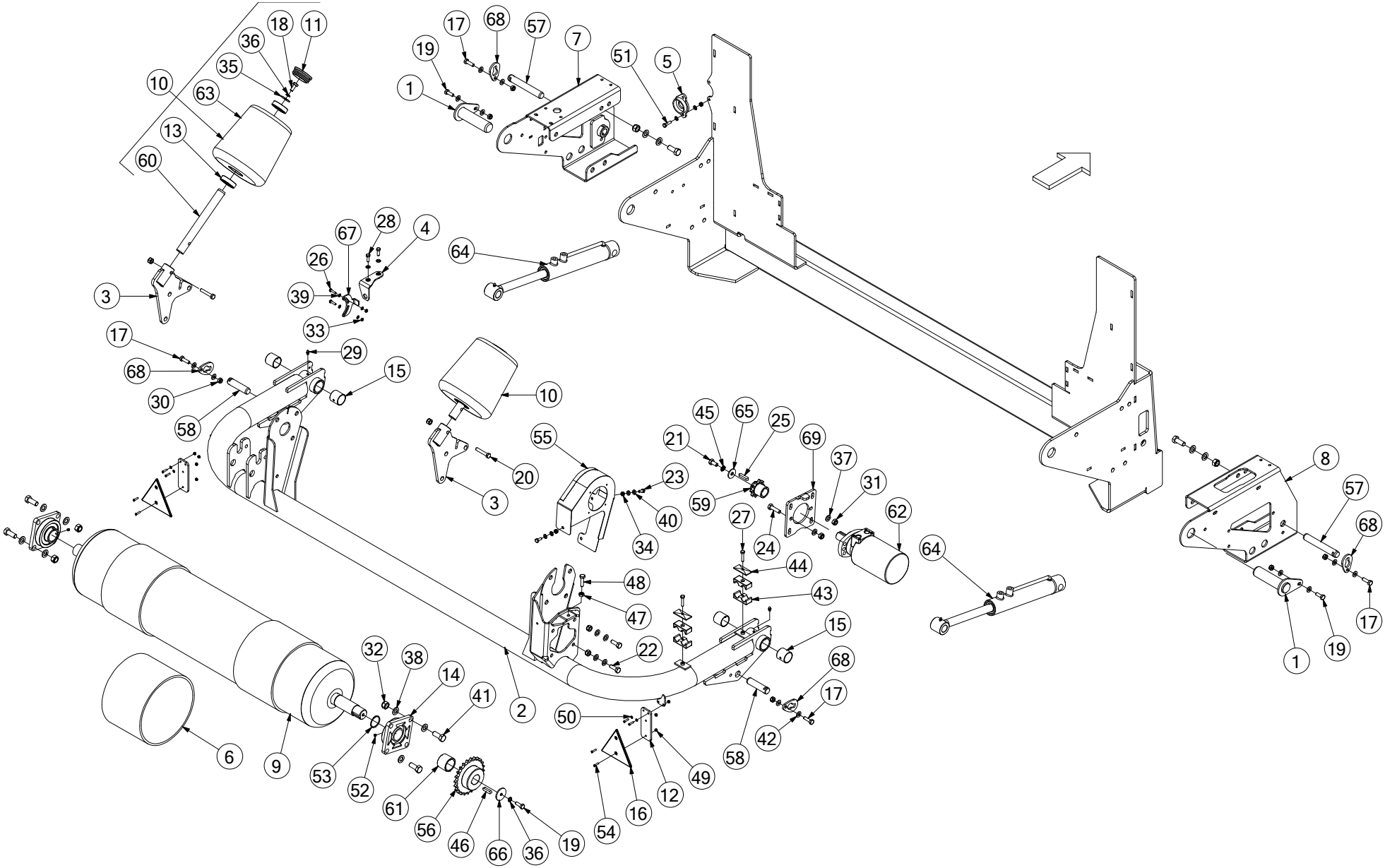

No.	Part No	Description	Qty
1	ACH00396	40MM PIN ASSY WRAPPER CRADLE	2
2	ACH00416	WRAPPER REAR FRAME WELD ASSY	1
3	ACH01348	BOBBIN BRACKET WELD ASSY LEFT	1
3	ACH01349	BOBBIN BRACKET WELD ASSY RIGHT	1
4	ACH01441	BALE CRADLE SENSOR BRACKET	1
5	ACH02821	RING SENSOR BRACKET FUSION 3 CT	1
6	ALA00129	BELT KIT FOR FUSION	3
7	ARC00298	CRADLE SUPPORT LH WELD ASM FUS3	1
8	ARC00299	CRADLE SUPPORT RH WELD ASM FUS3	1
9	ART00102	FUSION ROLLER COMPLETE W/BELTS	1
10	ART00363	BOBBIN ASY SMALL 30MM COMPLETE	2
11	CBC00008	CAP PLASTIC INSERT 75MM	2
12	CBE00255	RUBBER REFLECTOR HANGER STRIP	2
13	CBR00024	BEARING 62062RS	4
14	CBR00046	BEARING FLANGE UNIT SF 1 3/4"	2
15	CBR00082	BEARING GLACIER 4040 SY	4
16	CEL00077	REFLECTOR REAR TRIANGULAR RED	2
17	CFA00016	BOLT M10X35	4
18	CFA00024	SETSCREW M10X25 Z/P	2
19	CFA00025	SETSCREW M10X30	3
20	CFA00027	BOLT M10X60 Z/P	2
21	CFA00032	SETSCREW M12X30 Z/P	1
22	CFA00033	SETSCREW M12X35 Z/P	4
23	CFA00052	SETSCREW M8X20 Z/P	3
24	CFA00065	SETSCREW M12X45 Z/P	2
25	CFA00081	KEY 10X8X45	1
26	CFA00098	SETSCREW M6X25 Z/P	2
27	CFA00100	BOLT M8X40 Z/P	2
28	CFA00102	SETSCREW M8X25 Z/P	2
29	CFA00118	GREASE NIPPLE M8X1.25 STRAIGHT	2
30	CFA00123	NUT M10 NYLOC	6
31	CFA00124	NUT M12 NYLOC	8
32	CFA00128	NUT M16 NYLOC	17
33	CFA00131	NUT M6 NYLOC	2
34	CFA00132	NUT M8 NYLOC Z/P	5
35	CFA00134	WASHER MUDWING M10X38MM OD	2
36	CFA00137	WASHER SPRING 10MM HD Z/P	3
37	CFA00138	WASHER FLAT 12MM Z/P	10
38	CFA00140	WASHER FLAT 16MM Z/P	34
39	CFA00144	WASHER FLAT 6MM Z/P	4
40	CFA00147	WASHER FLAT 8MM Z/P	12
41	CFA00151	SETSCREW M16X40 Z/P	17
42	CFA00201	WASHER FLAT 10 MM Z/P	12
43	CFA00203	20MM HOSE CLAMP	4
44	CFA00204	HOSE CLAMP COVER PLATE 20-25	2
45	CFA00207	WASHER SPRING 12MM HD ZP	1
46	CFA00239	KEY 10X8X40	1
47	CFA00256	NUT M10 Z/P	1

No.	Part No	Description	Qty
48	CFA00312	SETSCREW M10X40 Z/P	1
49	CFA00321	NUT M5 NYLOC	8
50	CFA00337	WASHER FLAT 5MM Z/P	4
51	CFA00491	SETSCREW M8X30 Z/P	2
52	CFA00613	GRUBSCREW M8X6	4
53	CFA00803	CIRCLIP 45 MM EXTERNAL	1
54	CFA02316	SETSCREW M5X20 PAN HEAD Z/P	8
55	CGD00038	GUARD REAR ROLLER CRADLE	1
56	CMH00396	SPROCKET 3/4" PITCH 24T 40 DIA	1
57	CMH00403	PIN 25X170 Z/P MILLED FOR CAP	2
58	CMH00422	PIN 25 X 100 MILLED FOR CAP Z/P	2
59	CMH00749	SPROCKET 3/4" PITCH 10T 32 DIA	1
60	CMH01183	PIN 30X280 BOBBIN AXLE	2
61	CMH01201	BUSH 45X55X41	1
62	CMT00064	MOTOR 625CC SIDE PORT 32SHAFT	1
USE SEAL KIT CSE00110 FOR THIS MOTOR			
63	CPL00038	BOBBIN ASY SMALL 30MM BEARING	2
INCLUDES BEARINGS ITEM 13			
64	CRA00558	RAM 50X30 ROLLER CRADLE FUSION	2
65	CZC02058	3MM L WASHER 38 X 12.5 X 3	1
66	CZD00121	4MM L CUT & TIE SPACER Z/P	1
67	CZD04969	4MM L SENSOR PLATE PART	1
68	CZF00293	6MM L CAP SHORT FOR 25MM PINS	4
69	CZG02687	8MM L MOTOR PLATE PART	1

Dispenser ring (980)

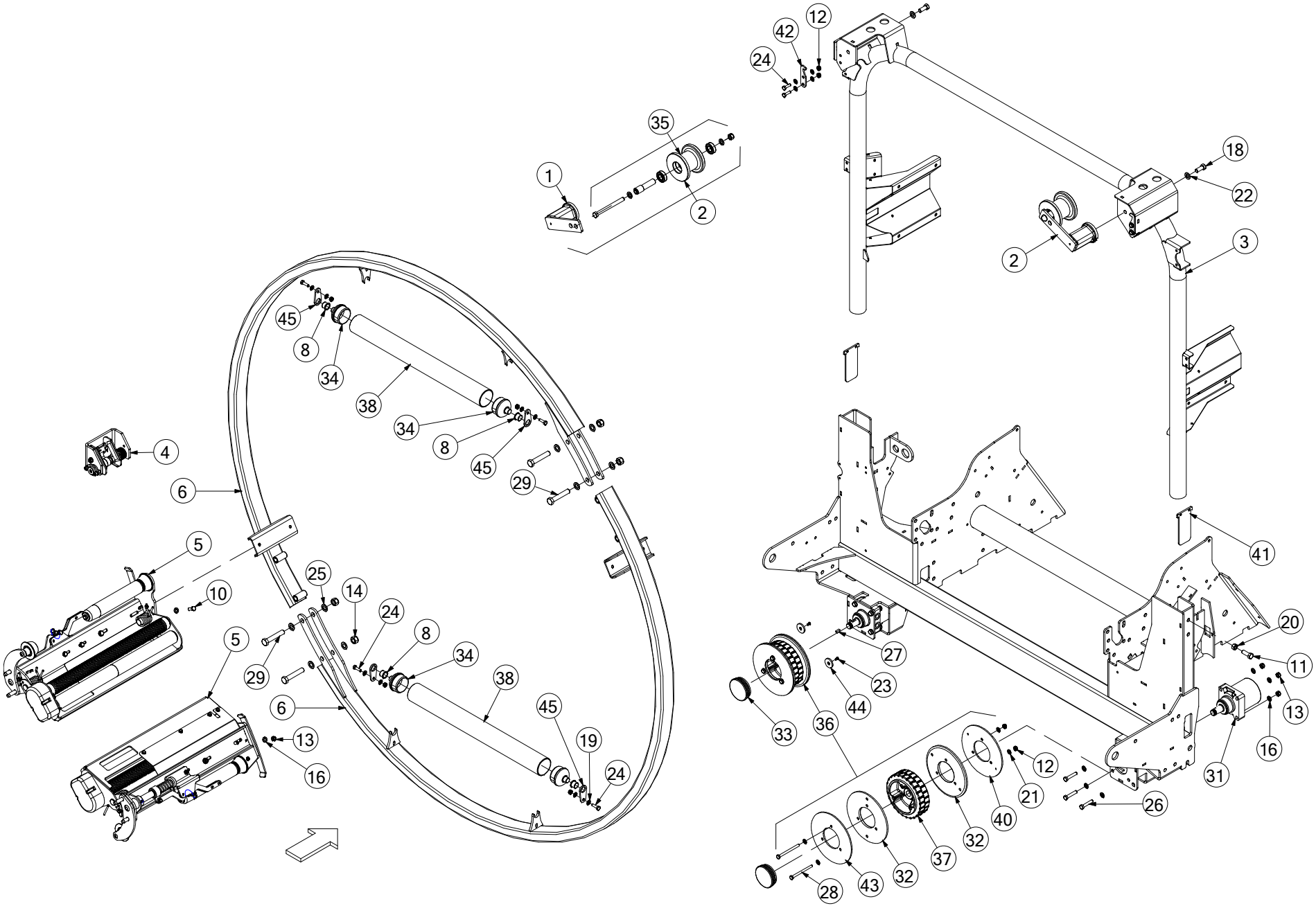

No.	Part No	Description	Qty
1	ACH00363	SUSPENSION UNIT ASSY	2
2	ACH00364	SUSPENSION UNIT DISPENSER RING *COMPLETE ASSEMBLY (INCLUDES ITEMS 1 & 35)*	2
3	ACH00701	DISPENSER ARCH FUSION 3 CT *USED ON FUSION 3 & FUSION 3 PLUS ONLY*	1
4	ACH01411	BRAKE CALIPER COMP ASSY FUSION 3	1
5	ADP00079	DISPENSER COMPLETE ASSY FUSION 3 *USED ON FUSION 3 & FUSION 3 PLUS (SHOWN)*	2
5	ADP00281	DISPENSER COMPLETE FUSION VARIO *USED ON FUSION VARIO ONLY*	2
6	ADP00060	KIT DISPENSER RING *COMPLETE RING ASSEMBLY INCLUDING ROLLERS (ITEMS 34, 38 ETC)*	1
8	CBR00329	BEARING 25X28X21 STEPPED PLASTIC	4
10	CFA00032	SETSCREW M12X30 Z/P	2
11	CFA00382	BOLT M16X45 Z/P *REPLACES SETSCREW CFA00074*	4
12	CFA00123	NUT M10 NYLOC	14
13	CFA00124	NUT M12 NYLOC	10
14	CFA00129	NUT M20 NYLOC	4
16	CFA00138	WASHER FLAT 12MM Z/P	20
18	CFA00151	SETSCREW M16X40 Z/P	2
19	CFA00201	WASHER FLAT 10 MM Z/P	16
20	CFA00231	NUT M16 Z/P	4
21	CFA00251	WASHER SKM10	12
22	CFA00252	WASHER SKM16	2
23	CFA01091	SCREW M6X16 CSK Z/P *REPLACES CFA00044 (M6X12 SETSCREW)*	2
24	CFA00311	SETSCREW M10X35 Z/P	8
25	CFA00413	WASHER FLAT 20MM Z/P	8
26	CFA00579	BOLT M12X65 ZP	8
27	CFA00611	KEY RING MOTOR FUSION	2
28	CFA00793	BOLT M10X130 Z/P	6
29	CFA02331	BOLT M20X110 8.8 Z/P	4
31	CMT00056	MOTOR 80CC WHEEL TAPER SHAFT *USE SEAL KIT CSE00110 FOR THIS MOTOR*	2
31a	CSE00110	SEAL KIT TG+TF PARKER HYD MTR	2
32	CPL00049	PLASTIC WHEEL WEAR PLATE 260 *USED ON FUSION 3 SERIES UP TO SERIAL No 664855 & ON FUSION VARIO UP TO SERIAL No 900600*	4
32	CPL00248	PLASTIC WHEEL WEAR PLATE 280 *USED ON FUSION 3 SERIES FROM SERIAL No 664856 & ON FUSION VARIO FROM SERIAL No 900601*	4
33	CPL00106	BLANKING CAP 110MM BLACK	2
34	CTP00354	ROLLER END RING FUSION 2	4
35	CWH00303	TOP GUIDE WHEEL DISPENSER RING *INCLUDES SHAFT, BEARINGS & FASTENERS*	2
36	CWH00255	DISPENSER DRIVE WHEEL 260 COMPLETE ASM *USED ON FUSION 3 SERIES UP TO SERIAL No 664855 & ON FUSION VARIO UP TO SERIAL No 900600*	2
36	CWH00284	DISPENSER DRIVE WHEEL FUSION 280 ASM *USED ON FUSION 3 SERIES FROM SERIAL No 664856 & ON FUSION VARIO FROM SERIAL No 900601*	2
37	CWH00276	WHEEL + TYRE DISP DRIVE CB63 *REPLACES CWH00254*	2
38	CXT00302	TUBE 88.9 X 4 X 845	2

No.	Part No	Description	Qty
40	CZF02725	6MM L WHEEL SIDE PLATE 260 DIA *USED ON FUSION 3 SERIES UP TO SERIAL No 664855 & ON FUSION VARIO UP TO SERIAL No 900600*	2
40	CZF08310	6MM L WHEEL SIDE PLATE 280 DIA *USED ON FUSION 3 SERIES FROM SERIAL No 664856 & ON FUSION VARIO FROM SERIAL No 900601*	2
41	CZF04516	6MM L CHASSIS PART FUSION	2
42	CZF06031	6MM L PLATE	2
43	CZF02725	6MM L WHEEL SIDE PLATE 260 DIA *USED ON FUSION 3 SERIES UP TO SERIAL No 664855 & ON FUSION VARIO UP TO SERIAL No 900600*	2
43	CZF08311	6MM L WHEEL SIDE PLATE 280 DIA *USED ON FUSION 3 SERIES FROM SERIAL No 664856 & ON FUSION VARIO FROM SERIAL No 900601*	2
44	CZG04729	8MM L WASHER SENSOR 8X47 *USED ON FUSION 3 SERIES UP TO SERIAL No 665173 & ON FUSION VARIO UP TO SERIAL No 900649*	2
45	CZF07502	6MM L PLATE DISPENSER RING	4

Dispenser ring brake (981)

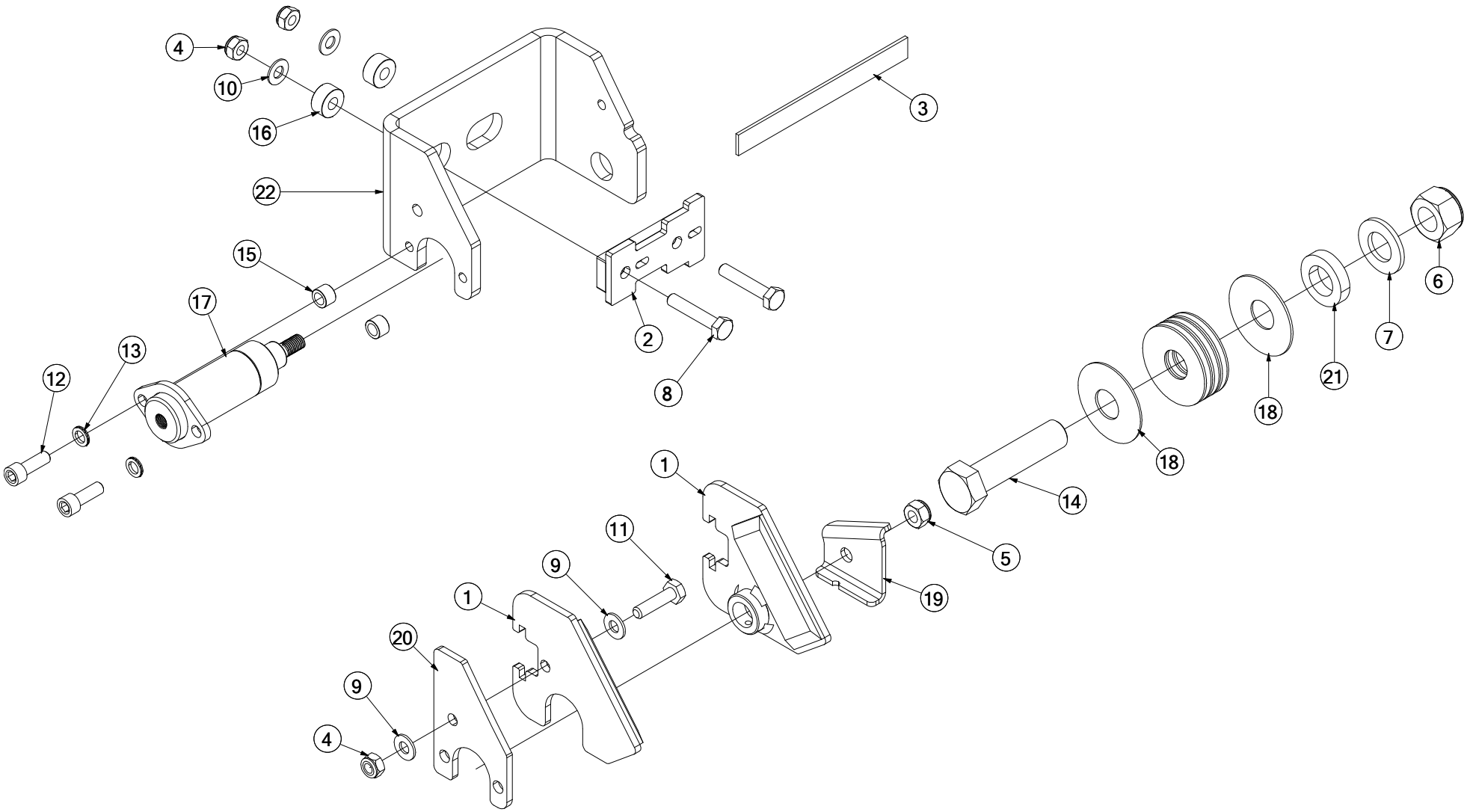

No.	Part No	Description	Qty
0	ACH01411	BRAKE CALIPER COMP ASSY FUSION 3 *COMPLETE ASSEMBLY - USED UP TO SERIAL No 662852 (FUSION 3) & SERIAL No 900343 (VARIO)*	1
0	ACH03011	BRAKE UNIT EXTD LARGE SPRINGS *COMPLETE ASSEMBLY - USED FROM SERIAL No 662853 (FUSION 3) & SERIAL No 900344 (VARIO)*	1
1	ABS00014	BRAKE PAD SET CALIPER FUSION *USED UP TO SERIAL No 662852 (FUSION 3) & SERIAL No 900343 (VARIO)*	1
1	ABS00259	BRAKE PAD SET [EXTENDED] *USED FROM SERIAL No 662853 (FUSION 3) & SERIAL No 900344 (VARIO)*	1
2	ACH01410	BRAKE PAD SLIDE FUSION 3 *REPLACES ACH00344*	1
3	CBE00258	RUBBER STRIP 190X20X3	1
4	CFA00123	NUT M10 NYLOC	3
5	CFA00124	NUT M12 NYLOC	1
6	CFA00128	NUT M16 NYLOC *USED UP TO SERIAL No 665639 (FUSION 3) & SERIAL No 900715 (VARIO)*	1
6	CFA00130	NUT M24 NYLOC *USED FROM SERIAL No 665640 (FUSION 3) & SERIAL No 900716 (VARIO)*	1
7	CFA00140	WASHER FLAT 16MM Z/P *USED UP TO SERIAL No 665639 (FUSION 3) & SERIAL No 900715 (VARIO)*	1
7	CFA00135	WASHER FLAT 1" Z/P *USED FROM SERIAL No 665640 (FUSION 3) & SERIAL No 900716 (VARIO)*	1
8	CFA00156	BOLT M10X55	2
9	CFA00201	WASHER FLAT 10 MM Z/P	2
10	CFA00251	WASHER SKM10	2
11	CFA00312	SETSCREW M10X40 Z/P	1
12	CFA00602	SETSCREW M10X30 SOC CAP Z/P	2
13	CFA00798	WASHER M10 NORDLOC	2
14	CFA01034	BOLT M16X70 Z/P GRADE 8.8 *USED UP TO SERIAL No 665639 (FUSION 3) & SERIAL No 900715 (VARIO)*	1
14	CFA02353	BOLT M24X100 8.8 Z/P DIN931 *USED FROM SERIAL No 665640 (FUSION 3) & SERIAL No 900716 (VARIO)*	1
15	CMH00809	BUSH 10X16X11 Z/P	2
16	CMH01329	BUSH 10X25X12	2
17	CRA00172	RAM BRAKE CALLIPER	1
18	CSG00032	SPRING BELVILLE 18X50 *USED UP TO SERIAL No 665639 (FUSION 3) & SERIAL No 900715 (VARIO)*	16
18	CSG00309	DISC SPRING 70X25.5X2 *USED FROM SERIAL No 665640 (FUSION 3) & SERIAL No 900716 (VARIO)*	8
19	CZD04962	4MM L SUPPORT STRUT BRAKE UNIT	1
20	CZF06844	6MM SPACER PLATE BRAKE CALIPER	1
21	CZH04743	10MM L WASHER 45X26.5 *USED FROM SERIAL No 665640 (FUSION 3) & SERIAL No 900716 (VARIO)*	1
22	CZH03976	10MM BRAKE CALIPER PART FUSION 3 *USED UP TO SERIAL No 665639 (FUSION 3) & SERIAL No 900715 (VARIO)*	1
22	CZH05765	10MM L BRAKE UNIT BRACKET BIG SPRINGS *USED FROM SERIAL No 665640 (FUSION 3) & SERIAL No 900716 (VARIO)*	1

No.	Part No	Description	Qty

Dispenser 1 (529)

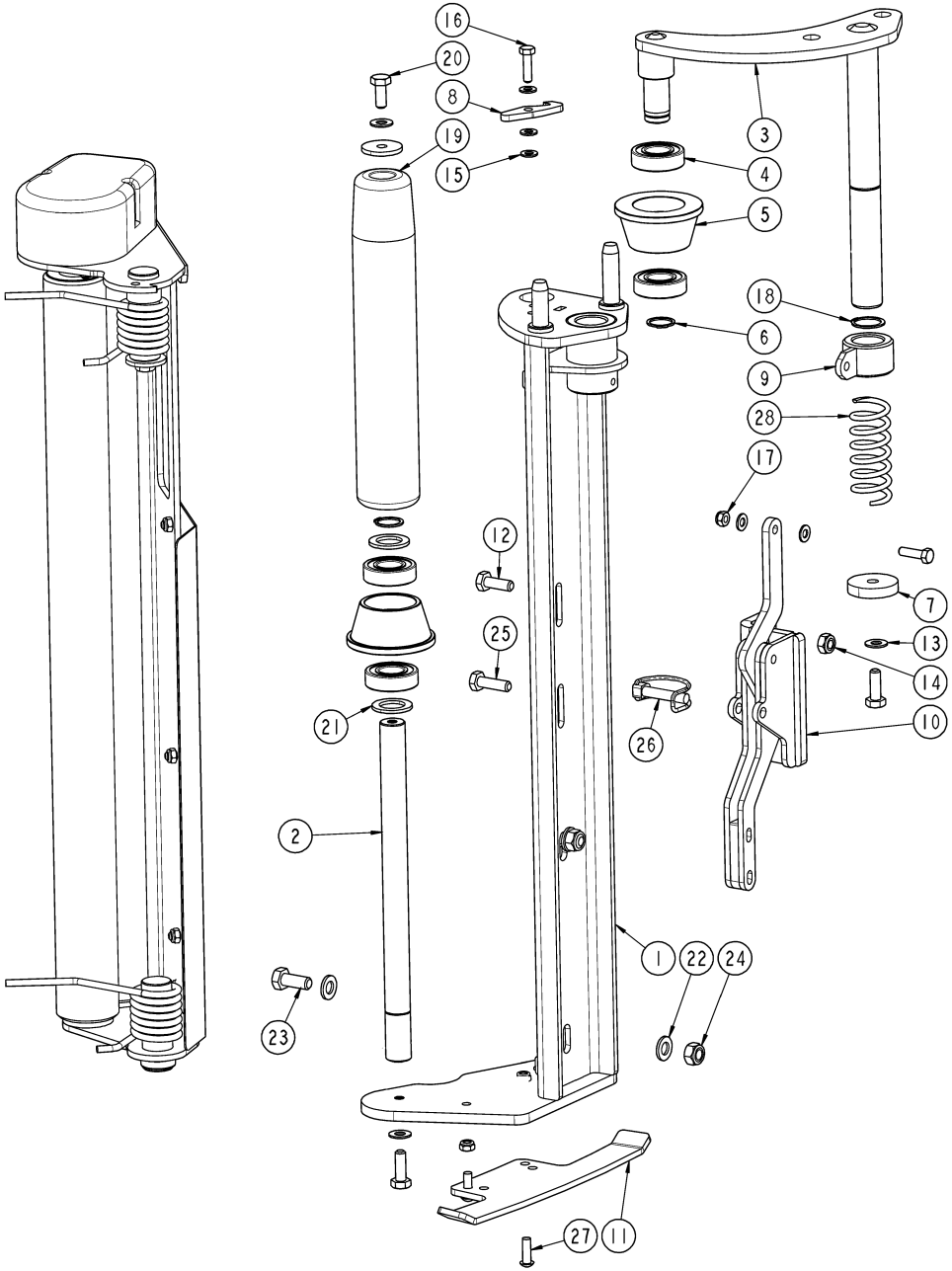

No.	Part No	Description	Qty
1	ADP00080	DISP WELD FILM HOLDER FUSION	1
2	CMH00573	PIN 25X392 AXLE FILM DISPENSER	1
3	ADP00084	DISP ROLL RETAINER WELD ASSY B/W	1
4	CBR00009	BEARING 6205 2RS	4
5	CMH00785	COIL ROLLER (2 BEARING TYPE)	2
6	CFA00001	CIRCLIP 25MM EXTERNAL Z/P	2
7	CZH02093	10MM L WASHER 10X50 Z/P	1
8	CZF02832	6MM L DISPENSER PART BALER	1
9	ADP00100	DISP SLIDE BUSH ASSY	1
10	ADP00162	DIS LOCK COMP ASSY	1
11	CZF02846	6MM L SENSOR PLATE BALER	1
12	CFA00025	SETSCREW M10X30	3
13	CFA00251	WASHER SKM10	7
14	CFA00123	NUT M10 NYLOC	2
15	CFA00147	WASHER FLAT 8MM Z/P	10
16	CFA00316	BOLT M8X30 Z/P	2
17	CFA00132	NUT M8 NYLOC Z/P	12
18	CFA00402	CIRCLIP 30MM EXTERNAL	1
19	CPL00059	BOBBIN DISPENSER ROLL GUIDE	1
20	CFA00024	SETSCREW M10X25 Z/P	3
21	CZC00112	3MM L DISPENSER SPACER	2
22	CFA00138	WASHER FLAT 12MM Z/P	4
23	CFA00032	SETSCREW M12X30 Z/P	2
24	CFA00124	NUT M12 NYLOC	2
25	CFA00311	SETSCREW M10X35 Z/P	1
26	CFA00194	LINCH PIN PIPE 10MMX50MM	1
27	CFA00744	SETSCREW M8X25 BUTTO	2
28	CSG00213	SPRING 4.88W/D X 31ID X 7T/C X 100 F/C	1

No.	Part No	Description	Qty

Dispenser 2 (530)

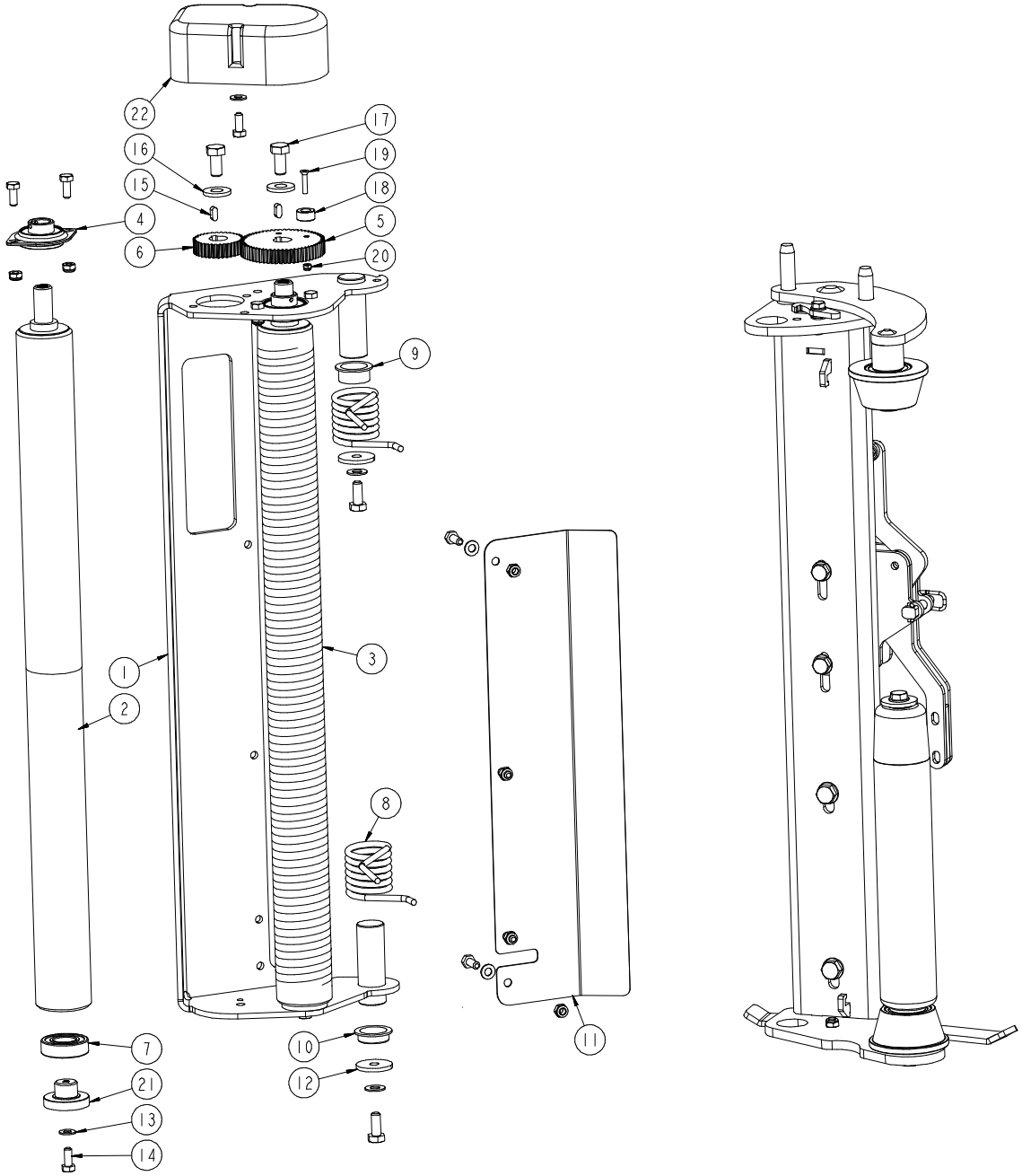

No.	Part No	Description	Qty
1	ADP00082	DISP ROLLER FRAME WELD ASSY B/W	1
USED ON FUSION 1, FUSION 2, FUSION 3 & FUSION 3 PLUS			
1	ADP00279	DISP ROLLER FRAME WELD VARIO	1
USED ON FUSION VARIO ONLY			
1	ADP00325	DISP WELD ROLLER FRAME ORBITAL	1
USED ON ORBITAL ONLY (FOR MACHINES PRIOR TO SERIAL No 125063 ALSO ORDER KIT KST00080)			
2	CMH00580	ROLLER SECONDARY ALU BALER/WRAPPER	1
3	CMH02320	ROLLER DISPENSER PRIMARY SPIROL FUSION/W20	1
4	CBR00004	BEARING 20MM 2BOLT P/S FLANGE	2
5+6	ADP00018	KIT DISPENSER GEARS 70%	1
5+6	ADP00019	KIT DISPENSER GEARS 55%	1
7	CBR00009	BEARING 6205 2RS	2
8	CSG00041	SPRING TOR 6.35WDX48ODX7.8COIL	2
9	CBR00068	BEARING 30X34X16 STEPPED PLAS	1
10	CBR00107	BEARING 30X34X11 STEPPED PLAS	1
11	CZB02152	1.5MM L DISPENSER GRASS GUARD	1
12	CZD00118	4MM L CUT& TIE SPACER	3
13	CFA00249	WASHER SKM8	4
14	CFA00052	SETSCREW M8X20 Z/P	12
15	CFA00153	KEY 6X6X15	2
16	CFA00139	WASHER FLAT 12MM H/D Z/P	2
17	CFA00031	SETSCREW M12X25 Z/P	2
18	CEL00059	MAGNET 20 X 10 260369	1
19	CFA00608	SETSCREW M5X25 CSK HEAD SS	1
20	CFA00348	NUT M5 NYLOC SS	1
21	CMH00583	PIN 50X40 STEPPED 20	2
22	CEL00221	TRANSMITTER EVEN/GEAR COVER	1
22	CEL00222	TRANSMITTER ODD/ GEAR COVER	1
22	CEL00636	KIT TRANSMITTERS AND RECEIVER	1
22a	CEL01610	BATTERY FILM TRANSMITTER MK2	1
22b	CGD00465	TRANSMITTER MK2 PLASTIC HOUSING	1

No.	Part No	Description	Qty

Cut & Hold LH (814)

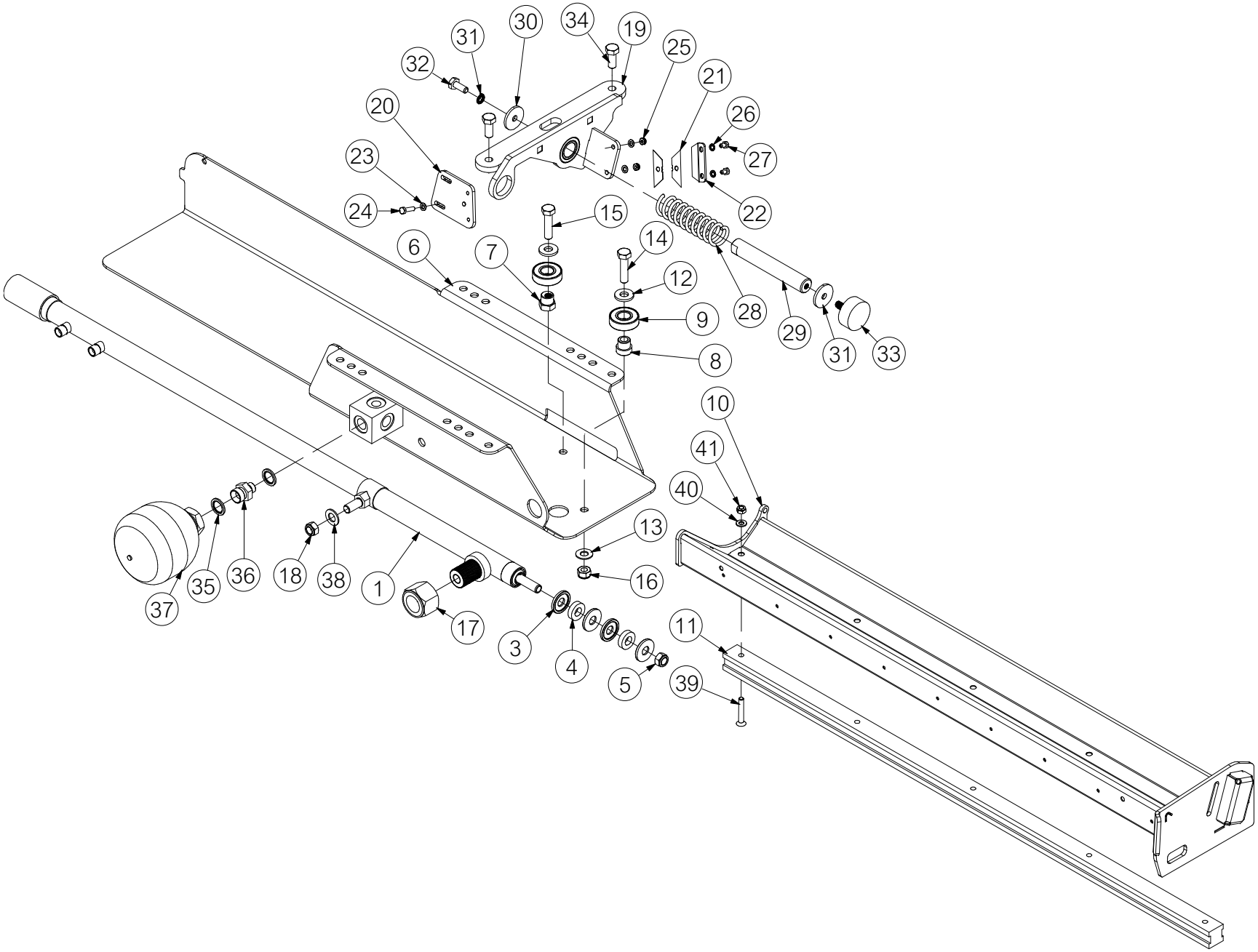

No.	Part No	Description	Qty
0	ACT00064	CUT & HOLD BALER LHS COMPLETE	1
1	CRA00074	RAM 25X18 CUT&HOLD 998	1
2	CSE00074	SEAL KIT RAM CUT&HOLD	1
SEAL KIT FOR CRA00074 (NOT SHOWN)			
3	CMH00330	WASHER DISHED 998 C&H RAM	4
4	CMH00331	WASHER RUBBER 998 C&H	2
5	CFA00126	NUT M14 NYLOC	1
6	ACT00065	CUT&HOLD FRAME WELD ASSY LH	1
7	CMH00262	BEARING HOLDER ECCENTRIC	1
8	CMH00261	BEARING HOLDER CONCENTRIC Z/P	2
9	CBR00020	BEARING 6204 2RS	3
10	ACT00002	CUT&HOLD SLIDER BARE (ALUM)	1
11	CMH00260	CUT&HOLD RAIL	1
12	CFA00139	WASHER FLAT 12MM H/D Z/P	3
13	CFA00250	WASHER SKM12	3
14	CFA00272	BOLT M12X50 Z/P	2
15	CFA00270	SETSCREW M12X50 Z/P	1
16	CFA00124	NUT M12 NYLOC	6
17	CFA00012	NUT 1"1/4 NYLOC UNF	1
18	CFA00126	NUT M14 NYLOC	1
19	ACT00003	CUT&HOLD 998, PLUNGER BRACKET	1
20	CZF02121	6MM L KNIFE PLATE	1
21	CKN00011	KNIFE STANLEY BLADE CUT&HOLD	2
22	CZC02012	3MM L 998 /COMBI KNIFE CLAMP	1
23	CFA00144	WASHER FLAT 6MM Z/P	4
24	CFA00098	SETSCREW M6X25 Z/P	2
25	CFA00131	NUT M6 NYLOC	2
26	CFA00268	WASHER 6MM SHAKEPROOF	2
27	CFA00269	SETSCREW M6X10 Z/P	2
28	CSG00036	SPRING COM 4.88X38X150X12	1
29	CMH00023	PIN 25X159 C.PLUNGER C&T	1
30	CZD00118	4MM L CUT& TIE SPACER	2
31	CFA00137	WASHER SPRING 10MM H.D Z/P	1
32	CFA00024	SETSCREW M10X25 Z/P	1
33	CBE00002	BUFFER RUBBER 50X21 M10X28	1
34	CFA00032	SETSCREW M12X30 Z/P	2
35	CHY00053	WASHER DOWTY 1/2	2
36	CHY02008	ADAPTOR 1/2 M 3/8 M	1
37	CVA03011	ACCUMULATOR 0.7 LITRE 70 BAR	1
38	CFA00222	WASHER FLAT 14MM Z/P	1
39	CFA00089	SETSCREW M8X45 CSK HEX Z/P	5
40	CFA00147	WASHER FLAT 8MM Z/P	5
41	CFA00132	NUT M8 NYLOC Z/P	5

No.	Part No	Description	Qty

Cut & Hold RH (532)

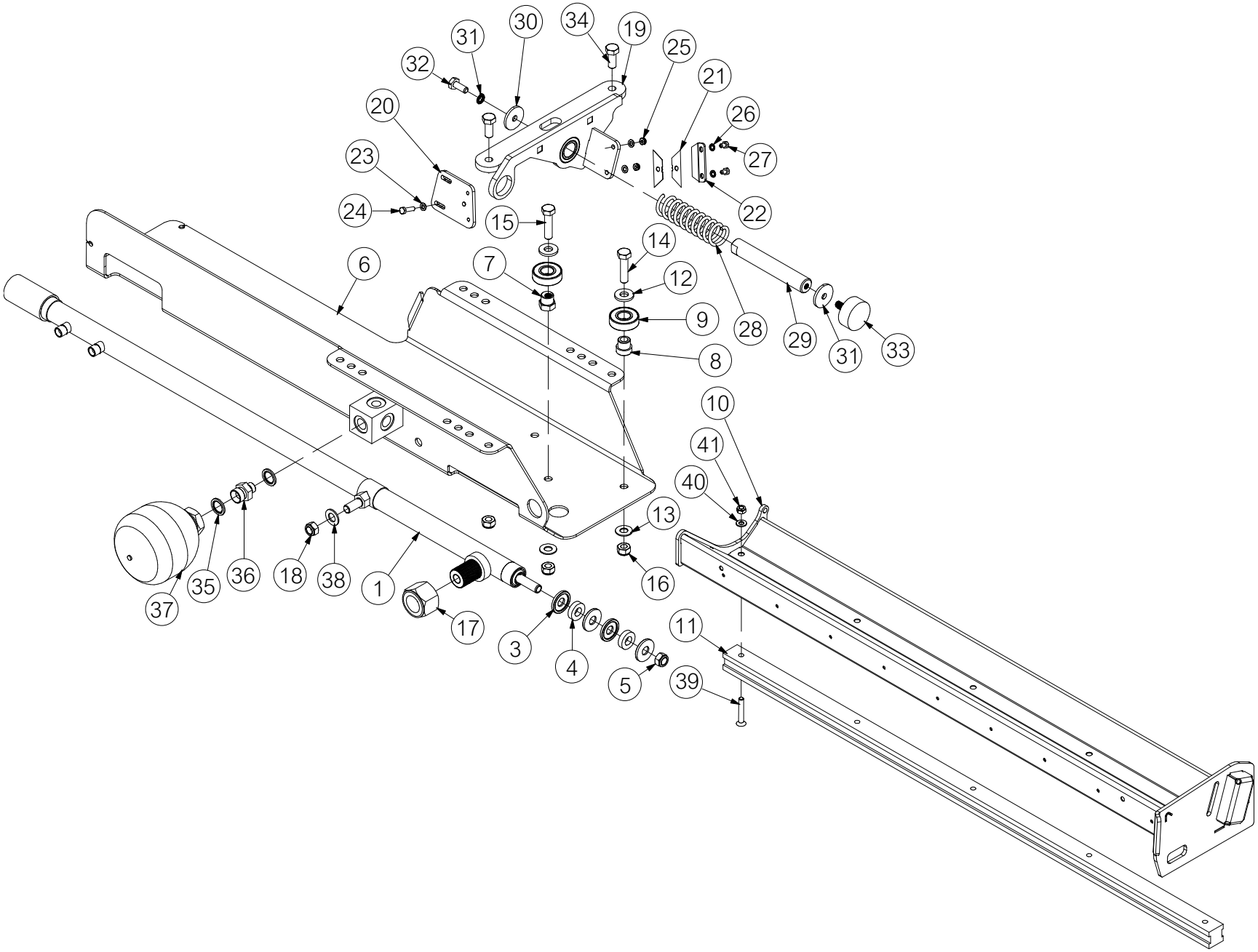

No.	Part No	Description	Qty
0	ACT00039	CUT & HOLD BALER RHS COMPLETE	1
ALSO ORDER HOSES CHY02897 & CHY02899 PRIOR TO SERIAL No 659778 (FUSION 3) & SERIAL No 900158 (FUS VARIO)			
1	CRA00074	RAM 25X18 CUT&HOLD 998	1
2	CSE00074	SEAL KIT RAM CUT&HOLD	1
SEAL KIT FOR CRA00074 (NOT SHOWN)			
3	CMH00330	WASHER DISHED 998 C&H RAM	4
4	CMH00331	WASHER RUBBER 998 C&H	2
5	CFA00126	NUT M14 NYLOC	1
6	ACT00042	CUT & HOLD FRAME WELD ASY RGHT	1
ALSO ORDER HOSES CHY02897 & CHY02899 PRIOR TO SERIAL No 659778 (FUSION 3) & SERIAL No 900158 (FUS VARIO)			
7	CMH00262	BEARING HOLDER ECCENTRIC	1
8	CMH00261	BEARING HOLDER CONCENTRIC Z/P	2
9	CBR00020	BEARING 6204 2RS	3
10	ACT00002	CUT&HOLD SLIDER BARE (ALUM)	1
11	CMH00260	CUT&HOLD RAIL	1
12	CFA00139	WASHER FLAT 12MM H/D Z/P	3
13	CFA00250	WASHER SKM12	3
14	CFA00272	BOLT M12X50 Z/P	2
15	CFA00270	SETSCREW M12X50 Z/P	1
16	CFA00124	NUT M12 NYLOC	6
17	CFA00012	NUT 1"1/4 NYLOC UNF	1
18	CFA00126	NUT M14 NYLOC	1
19	ACT00003	CUT&HOLD 998, PLUNGER BRACKET	1
20	CZF02121	6MM L KNIFE PLATE	1
21	CKN00011	KNIFE STANLEY BLADE CUT&HOLD	2
22	CZC02012	3MM L 998 /COMBI KNIFE CLAMP	1
23	CFA00144	WASHER FLAT 6MM Z/P	4
24	CFA00098	SETSCREW M6X25 Z/P	2
25	CFA00131	NUT M6 NYLOC	2
26	CFA00268	WASHER 6MM SHAKEPROOF	2
27	CFA00269	SETSCREW M6X10 Z/P	2
28	CSG00036	SPRING COM 4.88X38X150X12	1
29	CMH00023	PIN 25X159 C.PLUNGER C&T	1
30	CZD00118	4MM L CUT& TIE SPACER	2
31	CFA00137	WASHER SPRING 10MM H.D Z/P	1
32	CFA00024	SETSCREW M10X25 Z/P	1
33	CBE00002	BUFFER RUBBER 50X21 M10X28	1
34	CFA00032	SETSCREW M12X30 Z/P	2
35	CHY00053	WASHER DOWTY 1/2	2
36	CHY02008	ADAPTOR 1/2 M 3/8 M	1
37	CVA03011	ACCUMULATOR 0.7 LITRE 70 BAR	1
38	CFA00222	WASHER FLAT 14MM Z/P	1
39	CFA00089	SETSCREW M8X45 CSK HEX Z/P	5
40	CFA00147	WASHER FLAT 8MM Z/P	5
41	CFA00132	NUT M8 NYLOC Z/P	5

No.	Part No	Description	Qty

Side tip [Up to Serial No 657660] (557)

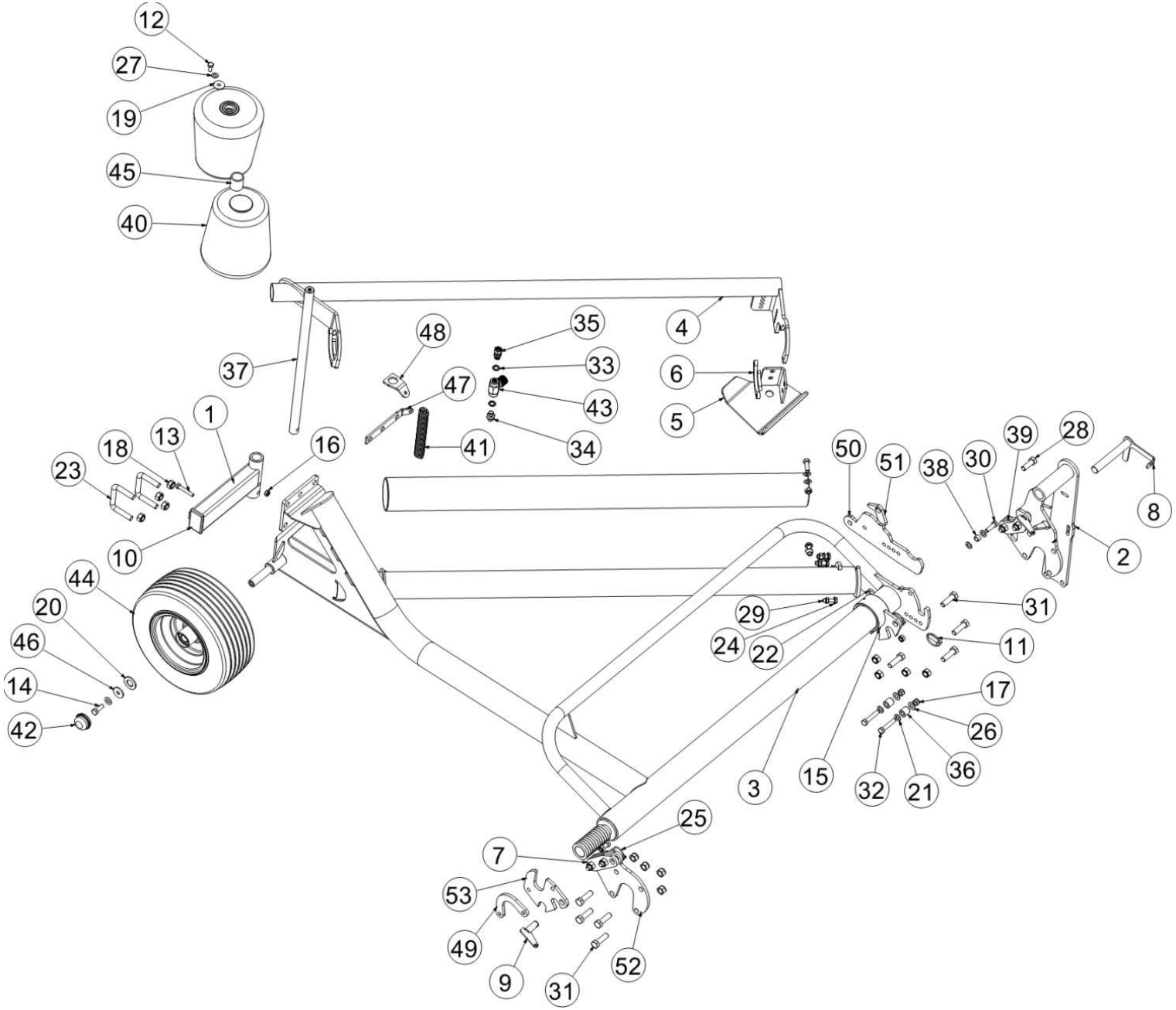

No.	Part No	Description	Qty
0	ABD00092	SIDE TIP WITH BOBBINS FUSION RETROFIT	1
SIDE TIP ASSEMBLY RETROFIT KIT - INCLUDES ALL REQUIREMENTS + INSTRUCTIONS			
1	ABD00030	BOBBIN AXLE BUSH	1
2	ABD00038	LEFT MOUNTING BRACKET	1
3	ABD00041	SIDE TIP BALER WELD	1
NO LONGER AVAILABLE. MUST ORDER COMPLETE SIDE TIP ASM - PART No ABD00092			
4	ABD00047	FUSION 2 SIDETIP BAR	1
5	ABD00048	FUSION 2 SIDETIP GROUND SUPPORT	1
6	ABD00050	LATCH SIDE TIP DROP BAR	2
7	ABD00053	HINGE ASSY SIDETIP FUSION 2	1
INCLUDES ITEMS 9, 14, 17, 18, 31, 39, 49, 52 & 53			
8	ABD00040	LOCK PIN 25X200 SIDETIP FUSION	1
FUSION 1 & 2 ONLY			
8	ABD00066	PIN 25 X 180 SIDE TIP FUSION 3	1
FUSION 3 ONLY			
9	ALA00335	PIN ASSY 20MM SIDETIP FUSION 2	1
10	CBC00021	CAP SQ PLASTIC INSERT 80 X 50	1
11	CFA00005	LINCH PIN 10MM	1
12	CFA00024	SETSCREW M10X25 Z/P	1
13	CFA00026	BOLT M10X60	1
14	CFA00031	SETSCREW M12X25 Z/P	7
15	CFA00118	GREASE NIPPLE M8X1.25 STRAIGHT	1
16	CFA00123	NUT M10 NYLOC	5
17	CFA00124	NUT M12 NYLOC	10
18	CFA00128	NUT M16 NYLOC	15
19	CFA00134	WASHER MUDWING M10X38MM OD	1
20	CFA00720	WASHER FLAT M26 Z/P DIN126	1
21	CFA00138	WASHER FLAT 12MM Z/P	12
22	CFA00140	WASHER FLAT 16MM Z/P	1
23	CFA00200	U BOLT M16X80X50 Z/P	2
24	CFA00201	WASHER FLAT 10 MM Z/P	4
25	CFA00202	LINCH PIN 6MM	2
26	CFA00250	WASHER SKM12	3
27	CFA00251	WASHER SKM10	1
28	CFA00282	BOLT M16X45	1
29	CFA00312	SETSCREW M10X40 Z/P	4
30	CFA00324	SETSCREW M12X40 Z/P	2
31	CFA00349	SETSCREW M16X55 Z/P	10
32	CFA00579	BOLT M12X65 ZP	2
33	CHY00020	WASHER DOWTY 3/8"	2
34	CHY02002	ADAPTOR 3/8" BSP M/M	1
35	CHY02098	ADAPTOR 3/8" BSP M-F	1
36	CMH00745	BUSH 12X25X25	2
37	CMH00874	SHAFT 30 X 660	1
38	CMH00968	BUSH 19X12.5X11	1
39	CMH01188	BUSH 16X30X11	2
40	CPL00008	BOBBIN ASY BIG 30MM BEARING	2
41	CSG00303	SPRING EXT 4.47X40.3X240 OPEN EYES	1
REPLACES CSG00207			
42	CTP00070	DUST CAP 170/60-8 VREDESTEIN	1

No.	Part No	Description	Qty
43	CVA00276	VALVE NEEDLE 3/8	1
44	CWH00037	WHEEL 170/60-8 V64+ 6PLY PICK-UP	1
45	CXT00424	C042.4X4X45	1
46	CFA00718	WASHER MUDWING A13 Z/P	1
46	CFA00250	WASHER SKM12	1
47	CZF04875	6MM L FUSION 2 SIDETIP BRACKET	1
48	CZF04876	6MM L FUSION 2 SIDETIP BRACKET	1
49	CZH02668	10MM L FUSION SIDE TIP	1
50	CZH03157	10MM L FUSION SIDETI	1
51	CZH03164	10MM L FUSION SIDETIP	1
52	CZH03485	10MM BALER SIDE TIP BRACKET	1
53	CZH03486	10MM BALER SIDE TIP BRACKET	1

Side tip [On Fusion 3 from Serial No 657661] (894)

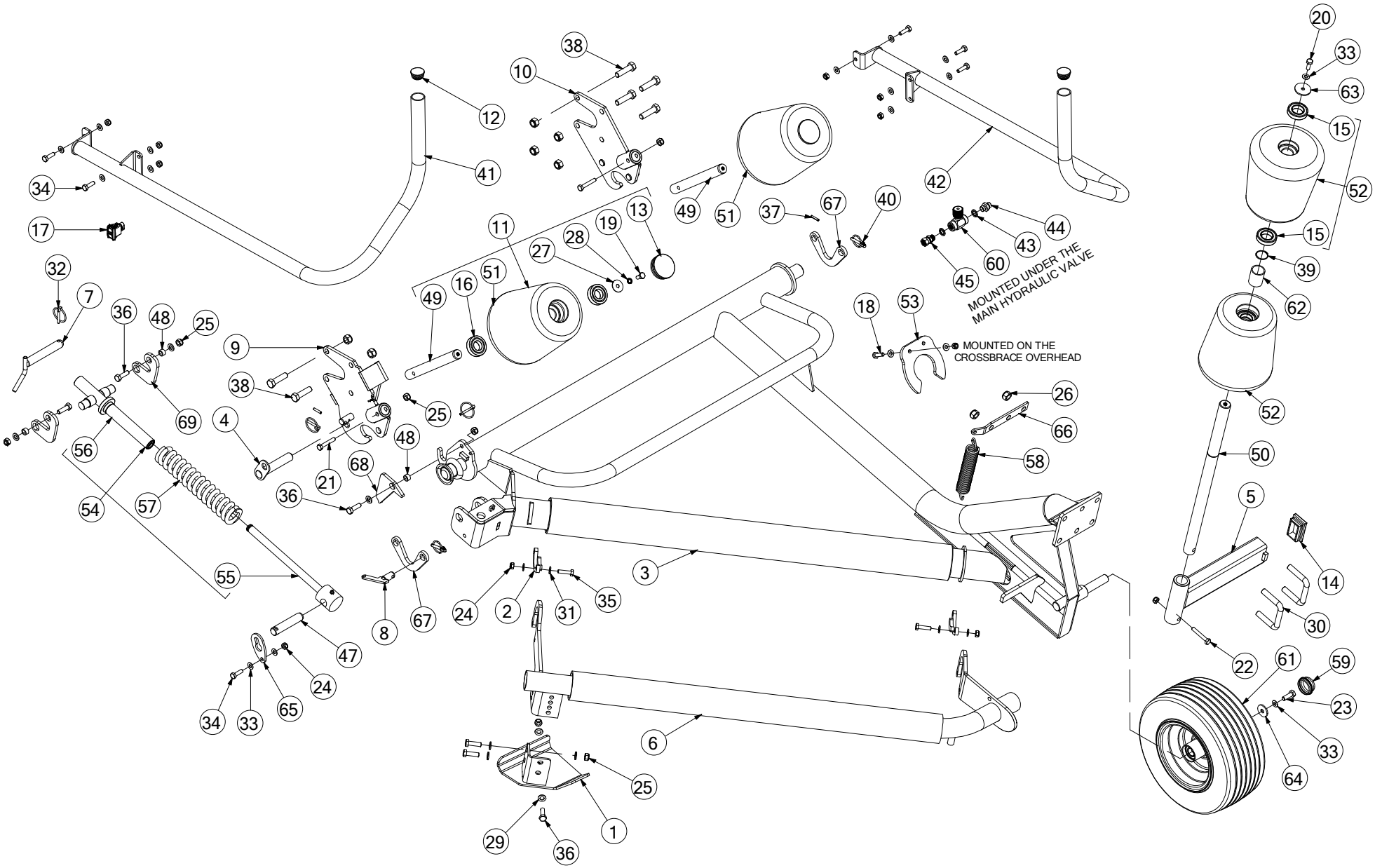

No.	Part No	Description	Qty
0	ABD00092	SIDETIP COMPLETE ALL FUSIONS	1
SIDE TIP ASSEMBLY COMPLETE FOR ALL FUSION MODELS REGARDLESS OF SERIAL NO (INCLUDES ALL ITEMS)			
1	ABD00048	FUSION 2 SIDETIP GROUND SUPPORT	1
2	ABD00050	LATCH SIDE TIP DROP BAR	2
3	ABD00071	SIDE TIP FUSION/VARIO WELD ASSY	1
4	ABD00073	FUSION/VARIO SIDE TIP TRANSPORT PIN	1
5	ABD00078	BOBBIN AXLE BUSH BRKT FUSION SIDETIP	1
USED ON FUSION 3 MODELS ONLY			
5	ABD00137	BIG BALE SIDETIP BRKT ASSY	1
USED ON FUSION VARIO MODELS ONLY			
6	ABD00079	FUSION 3/VARIO SIDETIP EXTENDED BAR	1
7	ABD00080	FUSION 3/VARIO SIDETIP SAFETY PIN	1
8	ABD00082	PIN FOR ABD00072 SIDE TIP FUSION	1
9	ACH01346	BOBBIN BRACKET WELD ASSY LEFT	1
10	ACH01347	BOBBIN BRACKET WELD ASSY RIGHT	1
11	ART00362	BOBBIN ASY BIG 30MM COMPLETE	2
FOR FUSION VARIO MOVE BOBBINS FROM REAR CRADLE (NOT INCLUDED IN ADB00092)			
11	ART00363	BOBBIN ASY SMALL 30MM COMPLETE	2
STD FUSION 3 ONLY (NOT REQUIRED FOR FUSION VARIO)			
12	CBC00005	CAP PLASTIC INSERT 42.4MM RND	2
13	CBC00008	CAP PLASTIC INSERT 75MM	2
14	CBC00021	CAP SQ PLASTIC INSERT 80 X 50	1
15	CBR00001	BEARING 6007 2RS	4
16	CBR00024	BEARING 62062RS	4
17	CEL00989	DOUBLE PUSH BUTTON SWITCH	1
SWITCH USED FOR EXTERNAL TIP CRADLE CONTROL FOR FOLDING SIDETIP TO WORK/TRANSPORT POSITION			
18	CFA00016	BOLT M10X35	2
19	CFA00024	SETSCREW M10X25 Z/P	2
20	CFA00025	SETSCREW M10X30	1
21	CFA00027	BOLT M10X60 Z/P	2
22	CFA00028	BOLT M10X65 Z/P	1
23	CFA00031	SETSCREW M12X25 Z/P	1
24	CFA00123	NUT M10 NYLOC	14
25	CFA00124	NUT M12 NYLOC	9
26	CFA00128	NUT M16 NYLOC	12
27	CFA00134	WASHER MUDWING M10X38MM OD	2
28	CFA00137	WASHER SPRING 10MM HD Z/P	2
29	CFA00138	WASHER FLAT 12MM Z/P	11
30	CFA00200	U BOLT M16X80X50 Z/P	2
31	CFA00201	WASHER FLAT 10 MM Z/P	24
32	CFA00202	LINCH PIN 6MM	3
33	CFA00251	WASHER SKM10	3
34	CFA00311	SETSCREW M10X35 Z/P	7
35	CFA00312	SETSCREW M10X40 Z/P	4
36	CFA00324	SETSCREW M12X40 Z/P	7
37	CFA00345	ROLL PIN 6X30 Z/P	2
38	CFA00409	BOLT M16 X 60 Z/P	8
39	CFA00514	CIRCLIP 35MM EXTERNAL	1
USED ON NEWER VERSIONS ONLY - REPLACES ITEM 62			
40	CFA01084	SAFETY LINCH PIN 8X42	2

No.	Part No	Description	Qty
41	CGD00336	PANEL GUARD LEFT REAR FUSION 3	1
42	CGD00349	PANEL GUARD RIGHT REAR FUSION 3	1
43	CHY00020	WASHER DOWTY 3/8"	2
44	CHY02002	ADAPTOR 3/8" BSP M/M	1
45	CHY02098	ADAPTOR 3/8" BSP M-F	1
46	CHY02807	HA06-0460WJ-F0600N-F0690-000	1
NOT SHOWN			
47	CMH00387	PIN 25X120 MILLED FOR CAP Z/P	1
48	CMH00968	BUSH 19X12.5X11	3
49	CMH01183	PIN 30X280 BOBBIN AXLE	2
50	CMH02592	SHAFT 35 X 660 FUSION SIDETIP	1
51	CPL00008	BOBBIN ASY BIG 30MM BEARING	2
FOR FUSION VARIO MOVE BOBBINS FROM REAR CRADLE (NOT INCLUDED IN ADB00092)			
51	CPL00038	BOBBIN ASY SMALL 30MM BEARING	2
STD FUSION 3 ONLY (NOT REQUIRED FOR FUSION VARIO) INCLUDES 2x ITEM 16			
52	CPL00192	BOBBIN ASSEMBLY 6007 BEARINGS	2
INCLUDES 2x ITEM 15			
53	CPL00224	PLASTIC PIPE CATCH 88.9	1
54	CRA00749	FUSION SIDE-TIP SUSPENSION RAM	1
INCLUDES ITEMS 55, 56 & 57			
55	CRA00755	ROD FOR CRA00749	1
56	CRA00756	CYL FOR CRA00749	1
57	CSG00287	SPRING COMP 12.7WDX63.5ODX16COILX320	1
58	CSG00303	SPRING EXT 4.47X40.3X240 OPEN EYES	1
REPLACES CSG00207			
59	CTP00070	DUST CAP 170/60-8 VREDESTEIN	1
60	CVA00276	VALVE NEEDLE 3/8	1
USED ON ALL STD FUSION 3. ON FUSION 3 PLUS UP TO SERIAL No 659743 & FUSION VARIO UP TO SERIAL No 900117			
61	CWH00037	WHEEL 170/60-8 V64+ 6PLY PICK-UP	1
62	CXT00763	TUBE 42.4X3X52	1
USED ON OLDER VERSIONS ONLY - REPLACED BY ITEM 39			
63	CZD00121	4MM L CUT & TIE SPACER Z/P	1
64	CFA00250	WASHER SKM12	1
64	CFA00718	WASHER MUDWING A13 Z/P	1
64	CFA00720	WASHER FLAT M26 Z/P DIN126	1
65	CZF00292	6MM L CAP LONG FOR 25MM PINS	1
66	CZF04875	6MM L FUSION 2 SIDETIP BRACKET	1
67	CZH03852	10MM L SIDE TIP PLATE FUSION/VARIO	2
68	CZH04865	10MM L SIDE-TIP FUSION LATCH	1
69	CZH04868	10MM SIDE TIP PART	2

Hydraulic layout Fusion 3 Plus [Up to Serial No 659743] (835)

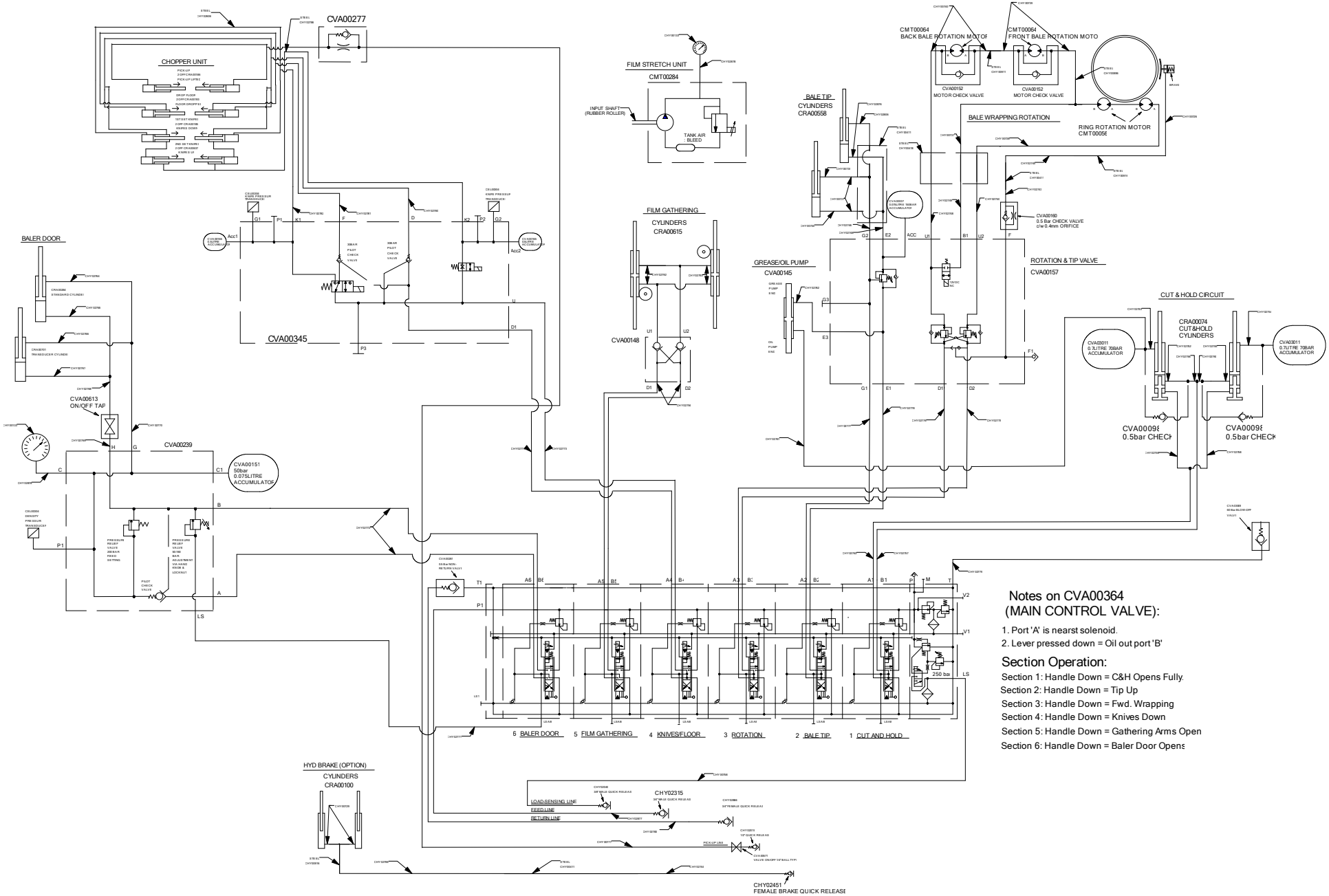

Notes on CVA00364 (MAIN CONTROL VALVE):

1. Port 'A' is nearst solenoid.
2. Lever pressed down = Oil out port 'B'

Section Operation:

Section 1: Handle Down = C&H Opens Fully.
Section 2: Handle Down = Tip Up
Section 3: Handle Down = Fwd. Wrapping
Section 4: Handle Down = Knives Down
Section 5: Handle Down = Gathering Arms Open
Section 6: Handle Down = Baler Door Opens

No.	Part No	Description	Qty
1	CEL00304	PRESSURE TRANSMITTER 0-250BAR	3
2	CHY02015	QR 1/2" MALE SHIELDED POPPET	2
3	CHY02040	QR 3/8" MALE	1
4	CHY02315	3/4" MALE QUICK RELEASE	1
5	CMT00056	MOTOR 80CC WHEEL TAPER SHAFT	2
6	CMT00064	MOTOR 625CC SIDE PORT 32SHAFT	2
7	CMT00284	PUMP ASSY COMBINED RELIEF VALVE	1
8	CRA00074	RAM CUT&HOLD 25X18 998/FUSION	2
9	CRA00185	RAM KNIFE ACTUATION BW	2
10	CRA00186	RAM PICKUP BALER	2
11	CRA00193	RAM CHOPPER FLOOR 20X40 BW	2
12	CRA00264	RAM 45X35X743 TOP DOOR FUSION	1
12	CRA00701	RAM DOOR WITH TRANSDUCER FUS	1
12a	CRA00721	TRANSDUCER SPARE PART OF CRA00701	1
13	CRA00558	RAM 50X30 ROLLER CRADLE FUSION	2
14	CRA00615	RAM FILM GATHERING UNIT	2
15	CRA00637	RAM 45X20 SELECT KNIFE	2
16	CVA00380	RELIEF/CHECK VALVE C&H FUSION	2
REPLACES CVA00098			
17	CVA00379	ACCUMULATOR 0.16L 75 BAR	1
18	CVA00157	VALVE ASY ROTATION & TIP BALER	1
19	CVA00165	ACCUMULATOR 0.5 LITRE 25 BAR	2
20	CVA00239	VALVE ASY BALER DOOR 2004+ MOD	1
21	CVA00261	VALVE CHECK 3/4 0.5 BAR M/F	1
22	CVA00277	VALVE CHECK 1.5 ORIFICE 1/4"	1
23	CVA00337	ACCUMULATOR 0.075L 150 BAR	1
24	CVA00345	VALVE SEL KNIFE OPTION CTRL	1
25	CVA00373	VALVE DPC130 6 BANK FUS3 PLUS &VARIO	1
26	CVA00571	VALVE ON/OFF DN 06 BKH-G 1/4"	1
27	CVA03009	VALVE DUMP 60BAR	1
28	CVA03011	ACCUMULATOR 0.7 LITRE 70 BAR	2
29	CVA03100	VALVE ON/OFF 3/8" BALL TYPE	1
30	CHY00726	HA04-1360WJ-F0400N-F0490N-000	1
31	CHY00729	HA04-1025WJ-F0490N-F0490N-315	2
32	CHY00731	HA04-0500WJ-F0400N-F0400N-000	2
33	CHY00734	HA04-1050WJ-F0400N-F0490N-000	1
34	CHY00735	HA04-1105WJ-F0400N-F0490N-000	1
35	CHY00737	HA08-0590WJ-F0800N-F0800N-000	1
36	CHY00738	HA08-0440WJ-F0800N-F0800N-000	1
37	CHY00739	HA08-0480WJ-F0800N-F0800N-000	1
38	CHY00740	HA08-1320WJ-F0800N-F0845N-000	1
39	CHY00758	HA04 4940WJ-F0400N-B0400N-000	1
40	CHY00777	HA04 4485WJ-F0400N-F0400N-000	1
41	CHY02743	HA04-0430WJ-F0400N-F0400N-000	1
42	CHY02744	HA04-4950WJ-F0400N-F0400N-000	1
43	CHY02745	HA04-0450WJ-F0400N-F0490N-000	1
44	CHY02746	HA04-0580WJ-F0400N-F0400N-000	1
45	CHY02748	HA08-0520WJ-F0800N-F0800N-000	1
46	CHY02749	HA08-0470WJ-F0800N-F0800N-000	1

No.	Part No	Description	Qty
47	CHY02750	HA08-0430WJ-F0800N-F0800N-000	1
48	CHY02752	HA06-0415WJ-F0600N-F0600N-000	1
49	CHY02753	HA06-0300WJ-F0600N-F0690N-000	1
50	CHY02752	HA06-0415WJ-F0600N-F0600N-000	1
51	CHY02753	HA06-0300WJ-F0600N-F0690N-000	1
52	CHY02756	HA06-4660WJ-F0600N-F0600N-000	1
53	CHY02757	HA06-0420WJ-F0600N-F0600N-000	2
54	CHY02758	HA06-0940WJ-F0600N-F0690N-000	1
55	CHY02759	HA06-4540WJ-F0600N-F0690N-000	1
56	CHY02760	HA06-0980WJ-F0600N-F0600N-000	1
57	CHY02761	HA04-2350WJ-F0490B-F0490B-000	1
58	CHY02762	HA04-4070WJ-F0490N-F0490N-000	1
60	CHY02764	HA06-4580WJ-F0600N-F0600N-000 LH	1
61	CHY02765	HA06-2540WJ-F0800N-F0690N-000 LH	1
62	CHY02766	HA06-1410WJ-F0600N-F0600N-000 RH	1
63	CHY02767	HA06-3140WJ-F0800N-F0690N-000 RH	1
64	CHY02768	HA08-0960WJ-F0890N-F0890N-180	1
65	CHY02769	HA08-2570WJ-F0690N-F0890N-000	1
66	CHY02770	HA06-0270WJ-F0690N-F0690N-090	1
67	CHY02771	HA04-1050WJ-F0490N-F0490N-000	1
68	CHY02772	HA06-0470WJ-F0600N-F0690N-000	2
69	CHY02773	HA04-0680WJ-F0400N-F0400N-000	1
70	CHY02774	HA04-0670WJ-F0400N-F0400N-000	1
71	CHY02775	HA08-0690WJ-F0800N-F0890N-000	1
72	CHY02776	HA08-0640WJ-F0800N-F0890N-000	1
73	CHY02777	HA06-0710WJ-F0600N-F0690N-000	1
74	CHY02778	HA06-0650WJ-F0600N-F0690N-000	1
75	CHY02779	HA06-0650WJ-F0600N-F0600N-000	1
76	CHY02780	HA04-0770WJ-F0400N-F0490N-000	1
77	CHY02781	HA04-0790WJ-F0400N-F0490N-000	1
78	CHY02782	HA04-0740WJ-F0400N-F0490N-000	1
79	CHY02783	HA12-4250WJ-F1200N-F1290P-000	1
80	CHY02792	HA04-1300WJ-F0400N-F0490N-000	2
80	CFA01022	SLEEVE PROTECTOR 45-27MMX550	2
81	CHY02793	HA04-1300WJ-F0490N-F0490N-90	1
81	CHY02928	HA04-1300WJ-F0490N-F0490N-270	1
82	CHY02794	HA04-2950WJ-F0400N-F0490N-000	2
83	CHY02796	HA04-0570WJ-F0400N-F0490N-000	1
84	CHY02806	HA04-0650WJ-F0400N-F0490N-000	1
85	CHY02876	HA04-0550WJ-F0400N-F0490N-000	1
86	CHY02877	HA10 4410WJ-F1200N-F1200N-000	1
87	CHY02878	PRESSURE GAUGE HOSE 2400MM	2
88	CVA00148	DOUBLE IN-LINE CHECK VALVE	1

Hydraulic layout Fusion 3 Plus [From Serial No 659744] (975)

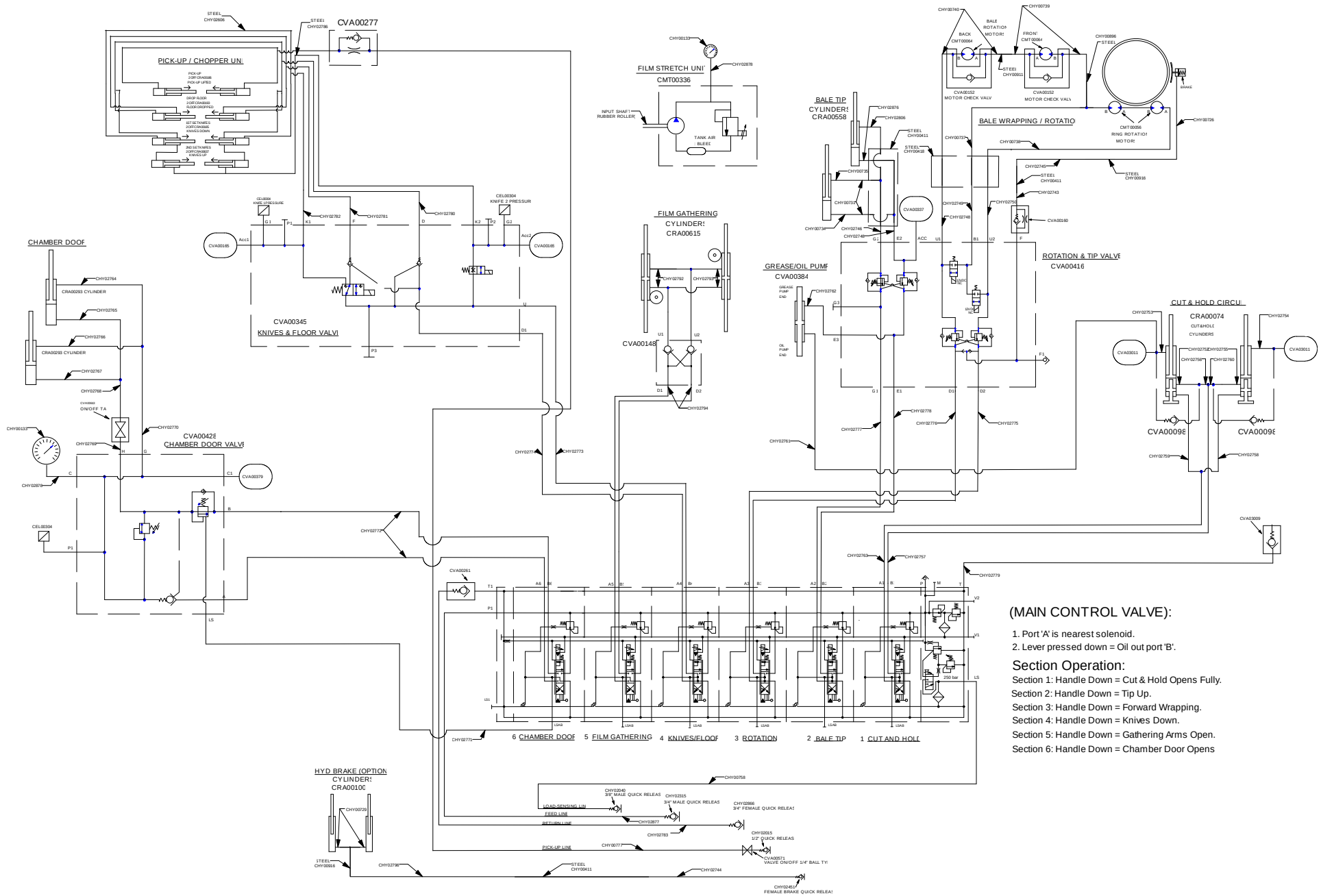

(MAIN CONTROL VALVE):

1. Port 'A' is nearest solenoid.
2. Lever pressed down = Oil out port 'B'.

Section Operation:

Section 1: Handle Down = Cut & Hold Opens Fully.
Section 2: Handle Down = Tip Up.
Section 3: Handle Down = Forward Wrapping.
Section 4: Handle Down = Knives Down.
Section 5: Handle Down = Gathering Arms Open.
Section 6: Handle Down = Chamber Door Opens

No.	Part No	Description	Qty
1	CEL00304	PRESSURE TRANSMITTER 0-250BAR	3
2	CHY02015	QR 1/2" MALE SHIELDED POPPET	2
3	CHY02040	QR 3/8" MALE	1
4	CHY02315	3/4" MALE QUICK RELEASE	1
5	CMT00056	MOTOR 80CC WHEEL TAPER SHAFT	2
6	CMT00064	MOTOR 625CC SIDE PORT 32SHAFT	2
7	CMT00336	PUMP ASSY COMBINED RELIEF VALVE	1
8	CRA00074	RAM CUT&HOLD 25X18 998/FUSION	2
9	CRA00185	RAM KNIFE ACTUATION BW	2
10	CRA00186	RAM PICKUP BALER	2
11	CRA00193	RAM CHOPPER FLOOR 20X40 BW	2
12	CRA00293	RAM 45X35X740 TOP DOOR FUSION3+	2
12a	CSE00293	SEAL KIT 45X35 FOR CRA00293	2
13	CRA00558	RAM 50X30 ROLLER CRADLE FUSION	2
14	CRA00615	RAM FILM GATHERING UNIT	2
15	CRA00637	RAM 45X20 SELECT KNIFE	2
16	CVA00380	RELIEF/CHECK VALVE C&H FUSION	2
REPLACES CVA00098			
17	CVA00379	ACCUMULATOR 0.16L 75 BAR	1
18	CVA00416	VALVE ASY ROTATION TIP FUSION	1
19	CVA00165	ACCUMULATOR 0.5 LITRE 25 BAR	2
20	CVA00428	BALER DOOR VALVE C/W OVERCENTRE	1
21	CVA00261	VALVE CHECK 3/4 0.5 BAR M/F	1
22	CVA00277	VALVE CHECK 1.5 ORIFICE 1/4"	1
23	CVA00337	ACCUMULATOR 0.075L 150 BAR	1
24	CVA00345	VALVE SEL KNIFE OPTION CTRL	1
25	CVA00406	DPC130 6 BANK FUS 3 PLUS-VARIO	1
FUSION 3 PLUS UP TO SERIAL No 665622 (SAME AS CVA00373 BY REPLACING #6 SPOOL (ITEM 3) WITH CVA00404)			
25	CVA00745	DPC130 6 BANK FUS 3 PLUS-VARIO LSB	1
USED ON FUSION 3 PLUS FROM SERIAL No 665623 (REPLACES CVA00406)			
26	CVA00571	VALVE ON/OFF DN 06 BKH-G 1/4"	1
27	CVA03009	VALVE DUMP 60BAR	1
28	CVA03011	ACCUMULATOR 0.7 LITRE 70 BAR	2
29	CVA03100	VALVE ON/OFF 3/8" BALL TYPE	1
30	CHY00726	HA04-1360WJ-F0400N-F0490N-000	1
31	CHY00729	HA04-1025WJ-F0490N-F0490N-315	2
32	CHY00731	HA04-0500WJ-F0400N-F0400N-000	2
33	CHY00734	HA04-1050WJ-F0400N-F0490N-000	1
34	CHY00735	HA04-1105WJ-F0400N-F0490N-000	1
35	CHY00737	HA08-0590WJ-F0800N-F0800N-000	1
36	CHY00738	HA08-0440WJ-F0800N-F0800N-000	1
37	CHY00739	HA08-0480WJ-F0800N-F0800N-000	1
38	CHY00740	HA08-1320WJ-F0800N-F0845N-000	1
39	CHY00758	HA04 4940WJ-F0400N-B0400N-000	1
40	CHY00777	HA04 4485WJ-F0400N-F0400N-000	1
41	CHY02743	HA04-0430WJ-F0400N-F0400N-000	1
42	CHY02744	HA04-4950WJ-F0400N-F0400N-000	1
43	CHY02745	HA04-0450WJ-F0400N-F0490N-000	1
44	CHY02746	HA04-0580WJ-F0400N-F0400N-000	1

No.	Part No	Description	Qty
45	CHY02748	HA08-0520WJ-F0800N-F0800N-000	1
46	CHY02749	HA08-0470WJ-F0800N-F0800N-000	1
47	CHY02750	HA08-0430WJ-F0800N-F0800N-000	1
48	CHY02752	HA06-0415WJ-F0600N-F0600N-000	1
49	CHY02753	HA06-0300WJ-F0600N-F0690N-000	1
50	CHY02752	HA06-0415WJ-F0600N-F0600N-000	1
51	CHY02753	HA06-0300WJ-F0600N-F0690N-000	1
52	CHY02756	HA06-4660WJ-F0600N-F0600N-000	1
53	CHY02757	HA06-0420WJ-F0600N-F0600N-000	2
54	CHY02758	HA06-0940WJ-F0600N-F0690N-000	1
55	CHY02759	HA06-4540WJ-F0600N-F0690N-000	1
56	CHY02760	HA06-0980WJ-F0600N-F0600N-000	1
57	CHY02761	HA04-2350WJ-F0490B-F0490B-000	1
58	CHY02762	HA04-4070WJ-F0490N-F0490N-000	1
60	CHY02764	HA06-4580WJ-F0600N-F0600N-000 LH	1
61	CHY02765	HA06-2540WJ-F0800N-F0690N-000 LH	1
62	CHY02766	HA06-1410WJ-F0600N-F0600N-000 RH	1
63	CHY02767	HA06-3140WJ-F0800N-F0690N-000 RH	1
64	CHY02768	HA08-0960WJ-F0890N-F0890N-180	1
65	CHY02769	HA08-2570WJ-F0690N-F0890N-000	1
66	CHY02770	HA06-0270WJ-F0690N-F0690N-090	1
67	CHY02771	HA04-1050WJ-F0490N-F0490N-000	1
68	CHY02772	HA06-0470WJ-F0600N-F0690N-000	2
69	CHY02773	HA04-0680WJ-F0400N-F0400N-000	1
70	CHY02774	HA04-0670WJ-F0400N-F0400N-000	1
71	CHY02775	HA08-0690WJ-F0800N-F0890N-000	1
72	CHY02776	HA08-0640WJ-F0800N-F0890N-000	1
73	CHY02777	HA06-0710WJ-F0600N-F0690N-000	1
74	CHY02778	HA06-0650WJ-F0600N-F0690N-000	1
75	CHY02779	HA06-0650WJ-F0600N-F0600N-000	1
76	CHY02780	HA04-0770WJ-F0400N-F0490N-000	1
77	CHY02781	HA04-0790WJ-F0400N-F0490N-000	1
78	CHY02782	HA04-0740WJ-F0400N-F0490N-000	1
79	CHY02783	HA12-4250WJ-F1200N-F1290P-000	1
80	CHY02792	HA04-1300WJ-F0400N-F0490N-000	2
80	CFA01022	SLEEVE PROTECTOR 45-27MMX550	2
81	CHY02793	HA04-1300WJ-F0490N-F0490N-180	1
81	CHY02928	HA04-1300WJ-F0490N-F0490N-270	1
82	CHY02794	HA04-3150WJ-F0400N-F0490N-000	2
83	CHY02796	HA04-0570WJ-F0400N-F0490N-000	1
84	CHY02806	HA04-0650WJ-F0400N-F0490N-000	1
85	CHY02876	HA04-0550WJ-F0400N-F0490N-000	1
86	CHY02877	HA10 4410WJ-F1200N-F1200N-000	1
87	CHY02878	PRESSURE GAUGE HOSE 2400MM	1
88	CVA00148	DOUBLE IN-LINE CHECK VALVE	1
89	CHY02451	QUICK RELEASE TRAILER BRAKE FEMALE	1
90	CHY02866	3/4 FEMALE QUICK RELEASE	1
90a	KST00123	KIT TANK LINE RELEASE VALVE	1

Hydraulic valve main control CVA00406 (937)

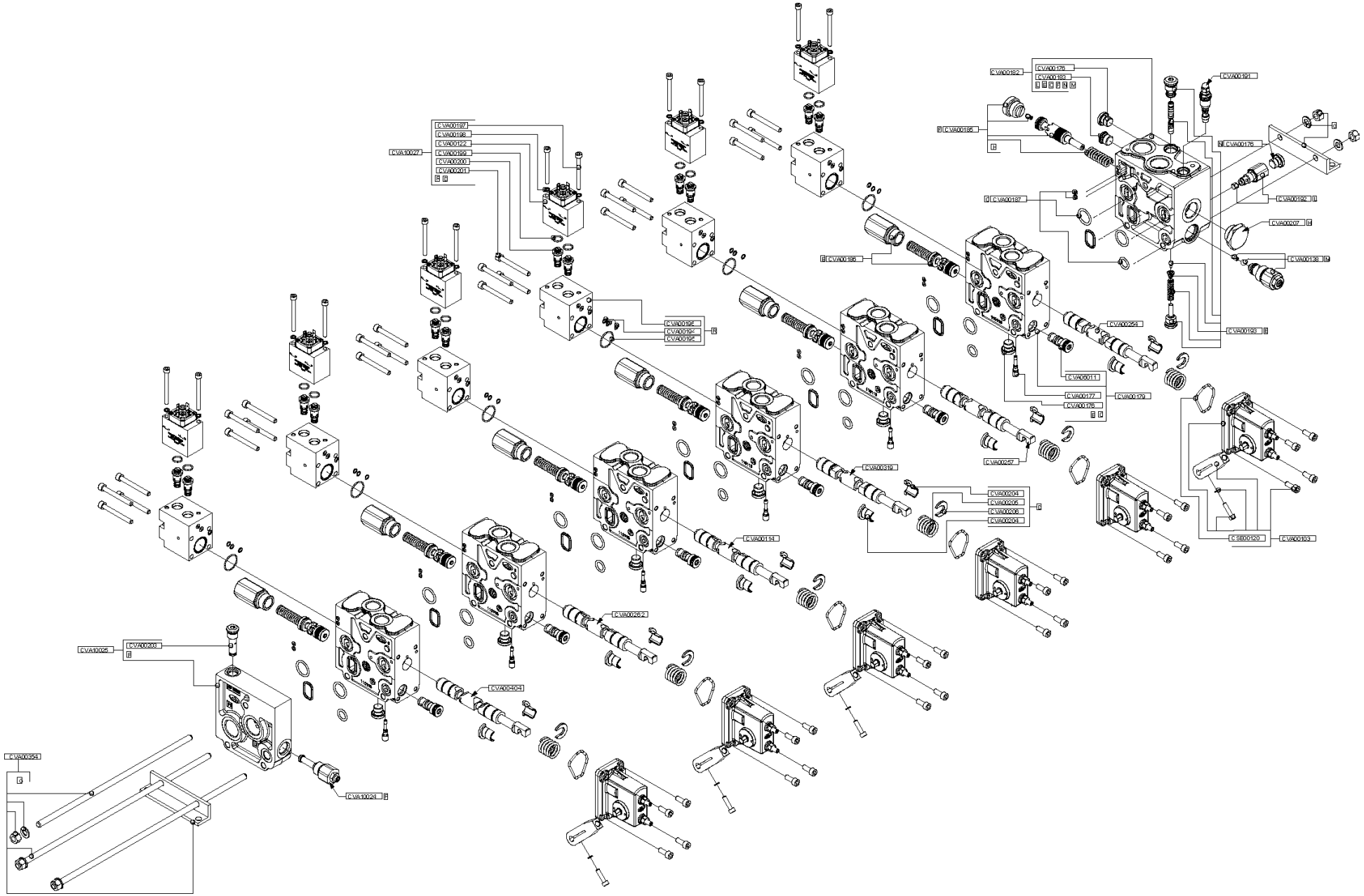

No.	Part No	Description	Qty
0	CVA00373	DPC130 6 BANK FUSION 3 PLUS	1
ON FUSION 3 PLUS UP TO SERIAL No 659743 (CVA00406 CAN BE USED BY REPLACING ITEM #3 WITH CVA00120)			
0	CVA00406	VALVE DPC130 6 BANK FUSION VARIO	1
ON FUSION 3+ FROM SERIAL No 659744 & ALL VARIO (CVA00373 CAN BE USED - REPLACING ITEM #3 WITH CVA00440)			
1	CSE00120	SEAL O-RING LEVER BOX DPC130	6
2	CVA00114	SPOOL 10L HS2000 FUSION2 F560	1
3	CVA00120	SPOOL BALE LIFT DPC130 998/FUS	1
USED ON FUSION 3 PLUS UP TO SERIAL No 659743			
3	CVA00440	SPOOL DOOR FUSION3+ AND VARIO GROOVED	1
ON FUSION 3 PLUS FROM SERIAL No 659744 & ALL VARIOS - REPLACES CVA00430 & CVA00404			
4	CVA00122	SOLENOID DPC130	6
5	CVA00138	PLUG OPEN/CLOSED DSK DPC130	1
6	CVA00176	PLUG BSP 1/4"	3
7	CVA00177	FLOW LIMITER DPC130	6
8	CVA00179	VALVE SECTION DPC130 C10	6
9	CVA00182	INLET SECTION	1
10	CVA00183	TAP M14 X 1.5	1
11	CVA00185	INLET COMPENSATION VALVE	1
12	CVA00186	SECTION COMPENSATOR DPC130	6
13	CVA00187	SEAL KIT DPC130 "O" RINGS	7
14	CVA00191	VALVE DPC130 (180-350BAR)	1
15	CVA00192	FILTER LOAD SENSING DPC130	1
16	CVA00193	VALVE PRES REDUCING DPC130	1
17	CVA00194	O-RING SEAL 5 X 1.2MM PARKER	6
18	CVA00195	O-RING SEAL 21.95MM X 1.78MM	6
19	CVA00196	CONTROL MODULE DPC130	6
20	CVA00197	SOC CAP M5 X 55MM	12
21	CVA00198	WASHER ELASTIC M5	12
22	CVA00199	O-RING SEAL 11.11MM X 1.78MM	12
23	CVA00200	PRESSURE REDUCER DPC130	12
24	CVA00201	SOC CAP M6 X 55MM	24
25	CVA00203	JOINT DPC130	1
26	CVA00204	OPEN BUSHING DPC130	12
27	CVA00205	SPRING DPC130	6
28	CVA00206	RING 11.2 X 23 X 3MM	6
29	CVA00207	PLUG DPC130	1
30	CVA00254	SPOOL CUT & HOLD FUSION	1
31	CVA00354	TIE ROD KIT VALVE CHEST FUS 6 BANK	1
32	CVA00257	SPOOL CRADLE TIP FUSION	1
33	CVA00448	SPOOL FUSION ROTATION GROOVED	1
REPLACES CVA00319			
34	CVA06011	SENSING LINE SHUTTLE ALL DPC	6
34	CSE00138	SEAL KIT DPC130 SHUTTLE VALVE	1
SEAL KIT FOR SHUTTLE VALVE CVA06011			
35	CVA10024	CATRIDGE	1
36	CVA10025	VALVE SECTION	1
37	CVA00103	LEVER PIVOT BOX	6
38	CVA10027	SOLENOID ASSY	6
39	CVA00262	SPOOL TOP DOOR FUSION TEST	1
40	CHY02008	ADAPTOR 1/2" M 3/8" M	10

No.	Part No	Description	Qty
PORTS A1, A2, A3, A5, A6, B1, B2, B3, B5 & B6			
40a	CHY00053	WASHER DOWTY 1/2"	12
PORTS A1 TO A6 & B1 TO B6			
41	CHY02013	ADAPTOR 1/2" BSP M/M	2
PORTS A4 & B4			
42	CHY02263	ADAPTOR 3/8"M / 3/4"M	2
PORTS P1 & T1			
42a	CHY02012	WASHER DOWTY 3/4"	2
PORTS P1 & T1			

Hyd valve knives & floor [On Fusion from S-No 654556 & F560 from S-No 705595] (702)

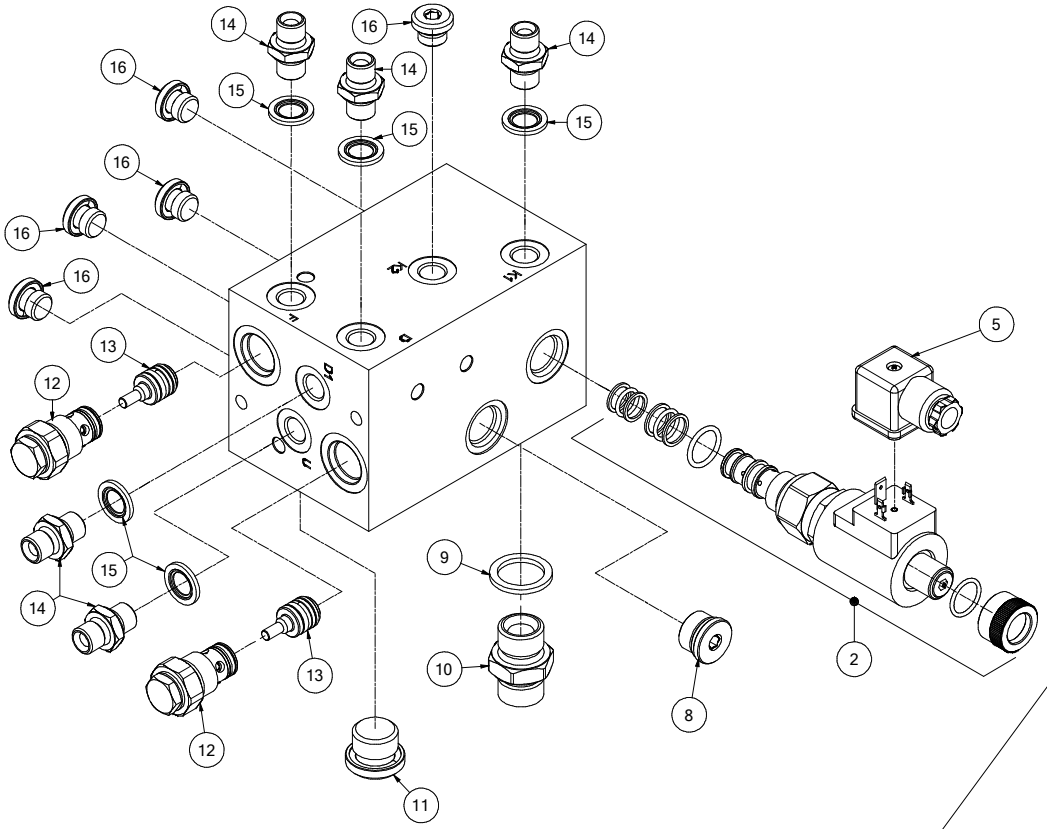

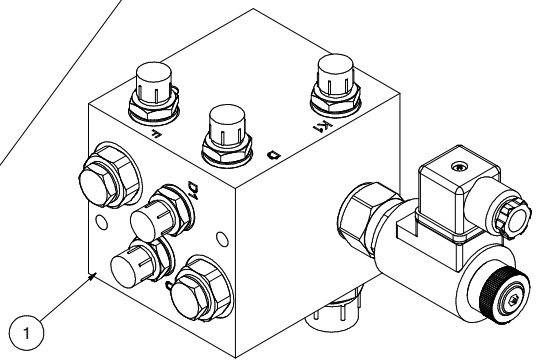

CVA00391 HYDRAFORCE

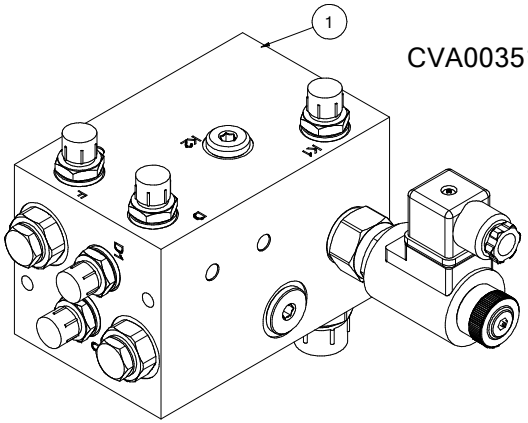

CVA00351 WALVOIL

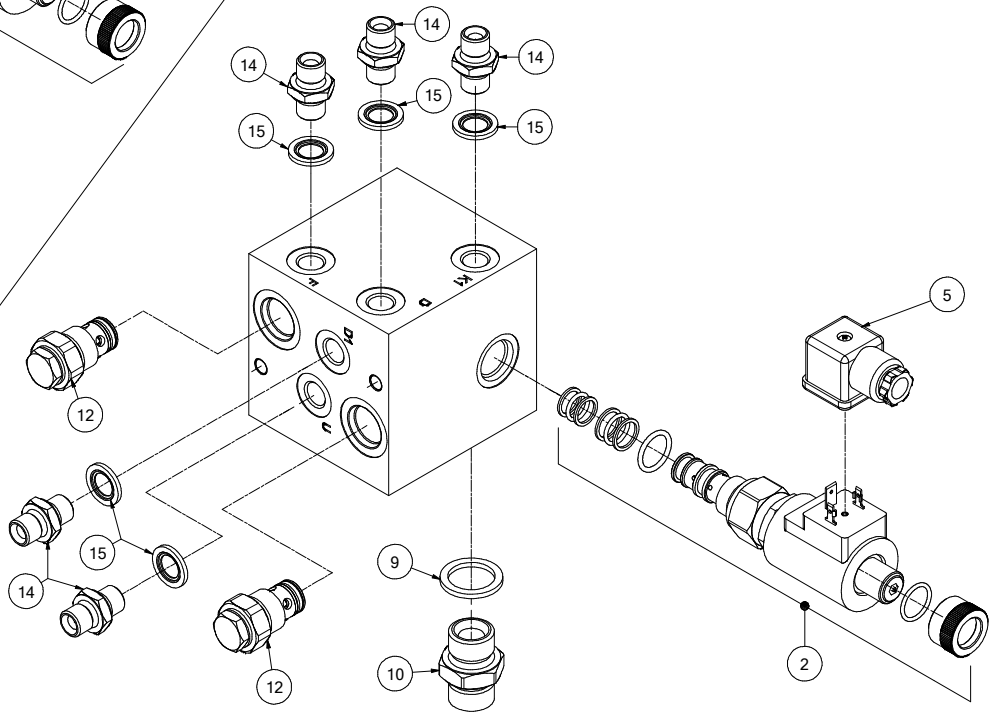

No.	Part No	Description	Qty
1	CVA00351	VALVE KNIFE/FLOOR CTRL FUSION2 *WALVOIL - NO LONGER AVAILABLE AS COMPLETE VALVE - REPLACED BY CVA00391*	1
1	CVA00391	VALVE ASSY KNIFE/FLOOR F3 SIN *HYDRAFORCE - USED ON FUSION 3 FROM SERIAL No 657543 & USED ON FUSION VARIO FROM SERIAL No 900055*	1
2	CVA00580	VALVE DBL BLOCK 2-POS 3-WAY NC *DOES NOT INCLUDE ITEM 5*	1
5	CEL00605	SOLENOID CONNECTOR 3-WAY EARTH *SOLD SEPARATELY*	1
8	CVA00557	BLANKING CAP (OLEOSTAR) *WALVOIL ONLY*	1
9	CHY00053	WASHER DOWTY 1/2"	1
10	CHY02013	ADAPTOR 1/2" BSP M/M	1
11	CVA00304	BSP 1/2 PLUG *WALVOIL ONLY*	1
12	CVA00243	CHECK VALVE CARTRIDGE FOR TIP *WALVOIL ONLY*	2
12	CVA00450	PO CHECK HYDRAFORCE 270PSI *HYDRAFORCE ONLY*	2
13	CVA00582	PISTON *WALVOIL ONLY*	2
14	CHY02010	ADAPTOR 1\4" BSP M/M	5
15	CHY00015	WASHER DOWTY 1/4"	5
16	CVA00176	PLUG BSP 1/4 ALLEN HD +SEAL *WALVOIL ONLY*	5

No.	Part No	Description	Qty

Hydraulic valve knives & floor [Selectable] CVA00345 (701)

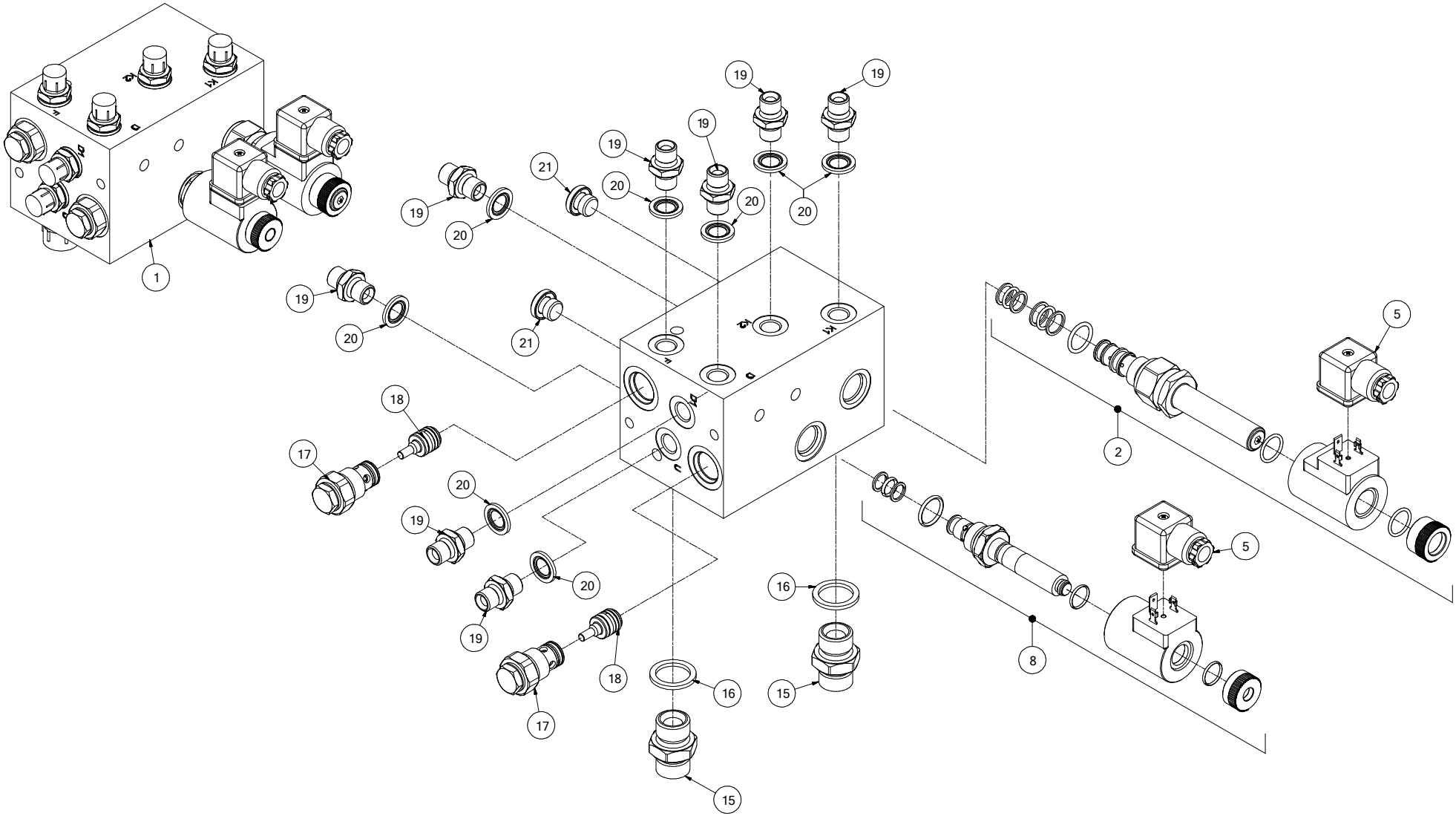

No.	Part No	Description	Qty
1	CVA00345	VALVE SELECT KNIFE OPTION CTRL *WALVOIL - NO LONGER AVAILABLE AS COMPLETE VALVE - REPLACED BY CVA00393*	1
1	CVA00393	VALVE ASSY KNIFE/FLOOR F3 SELECT *HYDRAFORCE - USED ON FUSION 3 FROM SERIAL No 663181 & FUSION VARIO FROM SERIAL No 900398*	1
2	CVA00580	VALVE DBL BLOCK 2-POS 3-WAY NC *DOES NOT INCLUDE ITEM 5*	1
5	CEL00605	SOLENOID CONNECTOR 3-WAY EARTH *SOLD SEPARATELY*	2
8	CVA00338	VALVE CTE DOUBLE CHECK NC *DOES NOT INCLUDE ITEM 5*	1
15	CHY02013	ADAPTOR 1/2" BSP M/M	2
16	CHY00053	WASHER DOWTY 1/2"	2
17	CVA00243	CHECK VALVE CARTRIDGE FOR TIP *WALVOIL ONLY*	2
17	CVA00450	PO CHECK HYDRAFORCE 270PSI *HYDRAFORCE ONLY ON FUSION 3 FROM SERIAL No 663181 & FUSION VARIO FROM SERIAL No 900398*	2
18	CVA00582	PISTON *WALVOIL ONLY*	2
19	CHY02010	ADAPTOR 1\4" BSP M/M	8
20	CHY00015	WASHER DOWTY 1/4"	8
21	CVA00176	PLUG BSP 1/4 ALLEN HD +SEAL *REPLACES CHY02554*	2

No.	Part No	Description	Qty

Hydraulic valve rotation & tip CVA00157 [On Fusion 3 Plus up to Serial No 659743] (543)

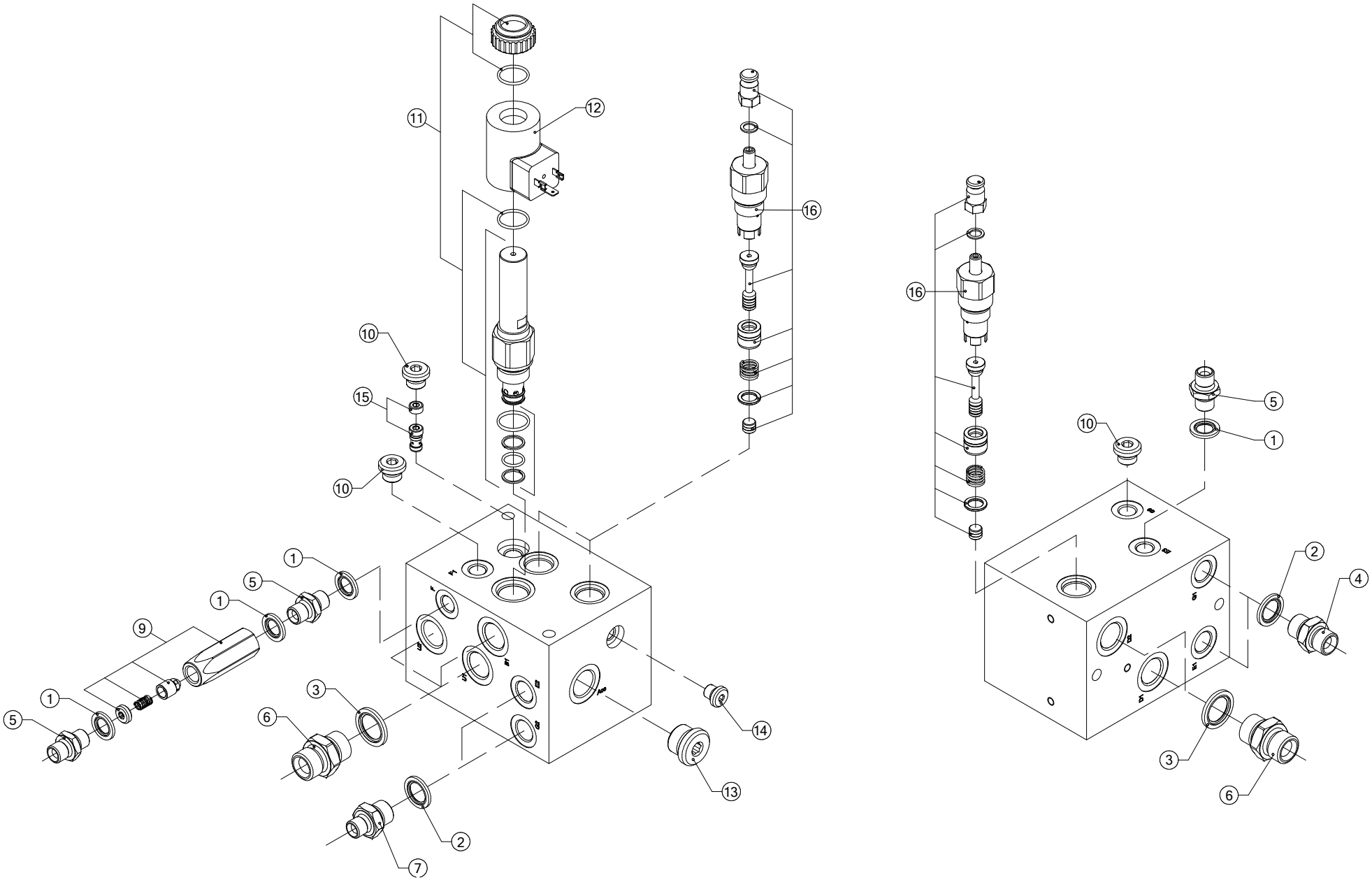

No.	Part No	Description	Qty
0	CVA00157	VALVE ASY ROTATION & TIP FUSION	1
INCLUDES ITEMS 1 THROUGH 16			
1	CHY00015	WASHER DOWTY 1/4"	4
2	CHY00020	WASHER DOWTY 3/8"	4
3	CHY00053	WASHER DOWTY 1/2"	5
4	CHY02002	ADAPTOR 3/8" BSP M/M	2
5	CHY02010	ADAPTOR 1/4" BSP M/M	3
6	CHY02013	ADAPTOR 1/2" BSP M/M	5
7	CHY02032	ADAPTOR 1/4 M 3/8 M	2
9	CVA00160	VALVE CHECK 1/4" 0.4MM ORIFICE	1
10	CVA00176	PLUG BSP 1/4 ALLEN HD +SEAL	3
11	CVA00252	VALVE CTE ON/OFF NC CVA0157&94	1
12	CVA00253	COIL FOR CTE VALVE ON CVA00157	1
13	CVA00304	BSP 1/2 PLUG	1
14	CVA00553	BLANKING CAP 1/8" (OLEOSTAR)	1
15	CVA00558	SHUTTLE VALVE ASSY	1
16	CVA00559	OVER CENTRE VALVE ASM-CVA00157	3
UP TO SERIAL No 662872			
16	CVA00668	VALVE OVER CENTRE	3
FROM SERIAL No 662873			

No.	Part No	Description	Qty

Hydraulic valve rotation & tip [From Serial No 659744/900118 Fusion 3 Plus/Vario] (970)

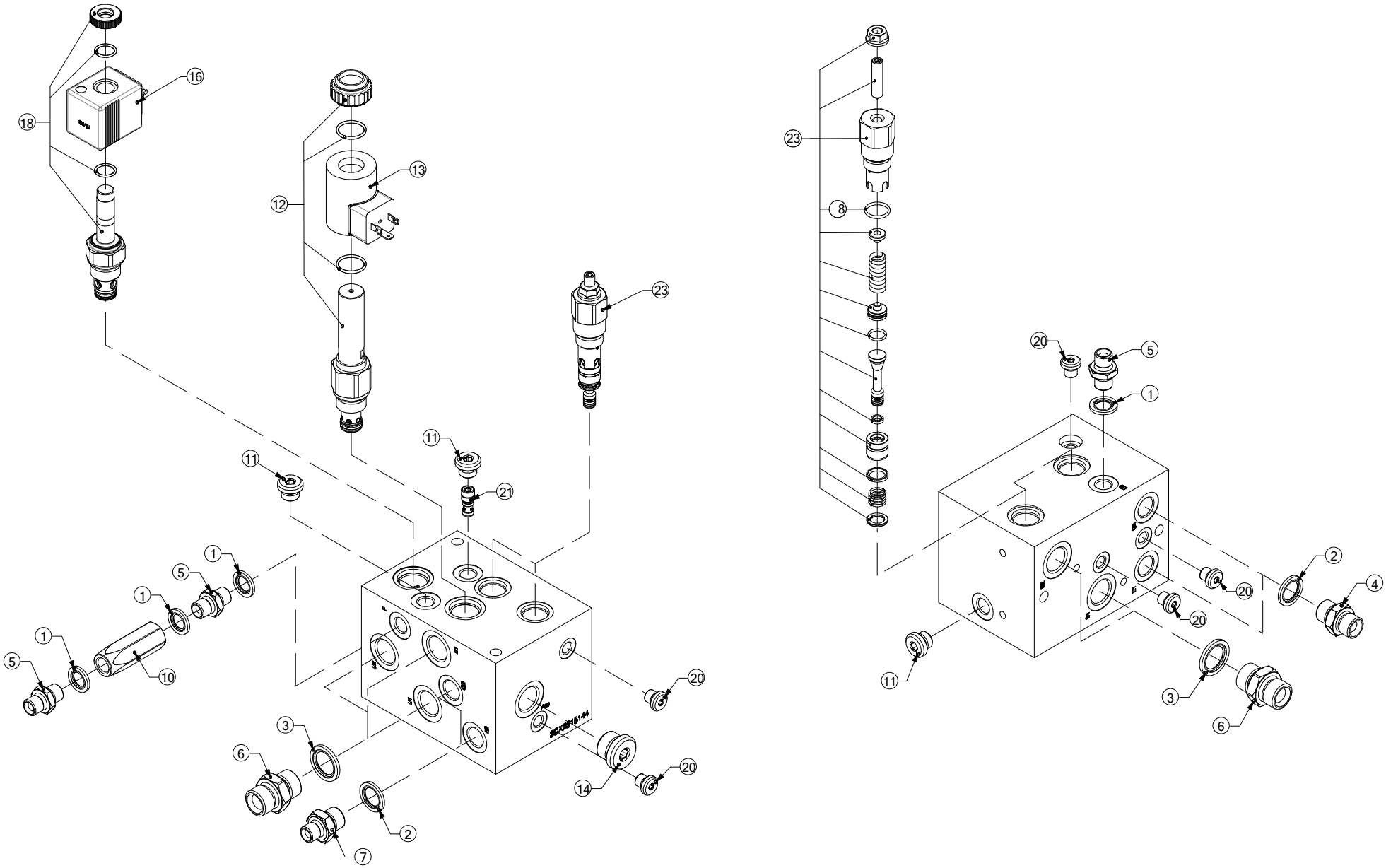

No.	Part No	Description	Qty
0	CVA00416	VALVE ASY ROTATION_TIP VARIO	1
INCLUDES ITEMS 1 THROUGH 23			
1	CHY00015	WASHER DOWTY 1/4	4
2	CHY00020	WASHER DOWTY 3/8	4
3	CHY00053	WASHER DOWTY 1/2	5
4	CHY02002	ADAPTOR 3/8 BSP M/M	2
5	CHY02010	ADAPTOR 1/4 BSP M/M	3
6	CHY02013	ADAPTOR 1/2 BSP M/M	5
7	CHY02032	ADAPTOR 1/4 M 3/8 M	2
8	CSE00164	O-RING 70 SH NBR 15.60X1.78	4
10	CVA00160	VALVE CHECK 1/4 0.4MM ORIFICE	1
11	CVA00176	PLUG BSP 1/4 ALLEN HD +SEAL	3
12	CVA00252	VALVE CTE ON/OFF NC EE10A20PB	1
13	CVA00253	COIL FOR CTE VALVE ON FUSION	1
14	CVA00304	BSP 1/2 PLUG	1
16	CVA00399	COIL 12VDC DIN BE-EC36	1
18	CVA00422	VALVE CTE ON/OFF SAE10 POPPET	1
20	CVA00553	BLANKING CAP 1/8" (OLEOSTAR)	5
21	CVA00558	SHUTTLE VALVE ASSY	1
23	CVA00668	VALVE OVER CENTRE CVA00378-416	4

No.	Part No	Description	Qty

Hydraulic valve chamber door CVA00239 [Used on Fusion 3 Plus up to Serial No 659743] (822)

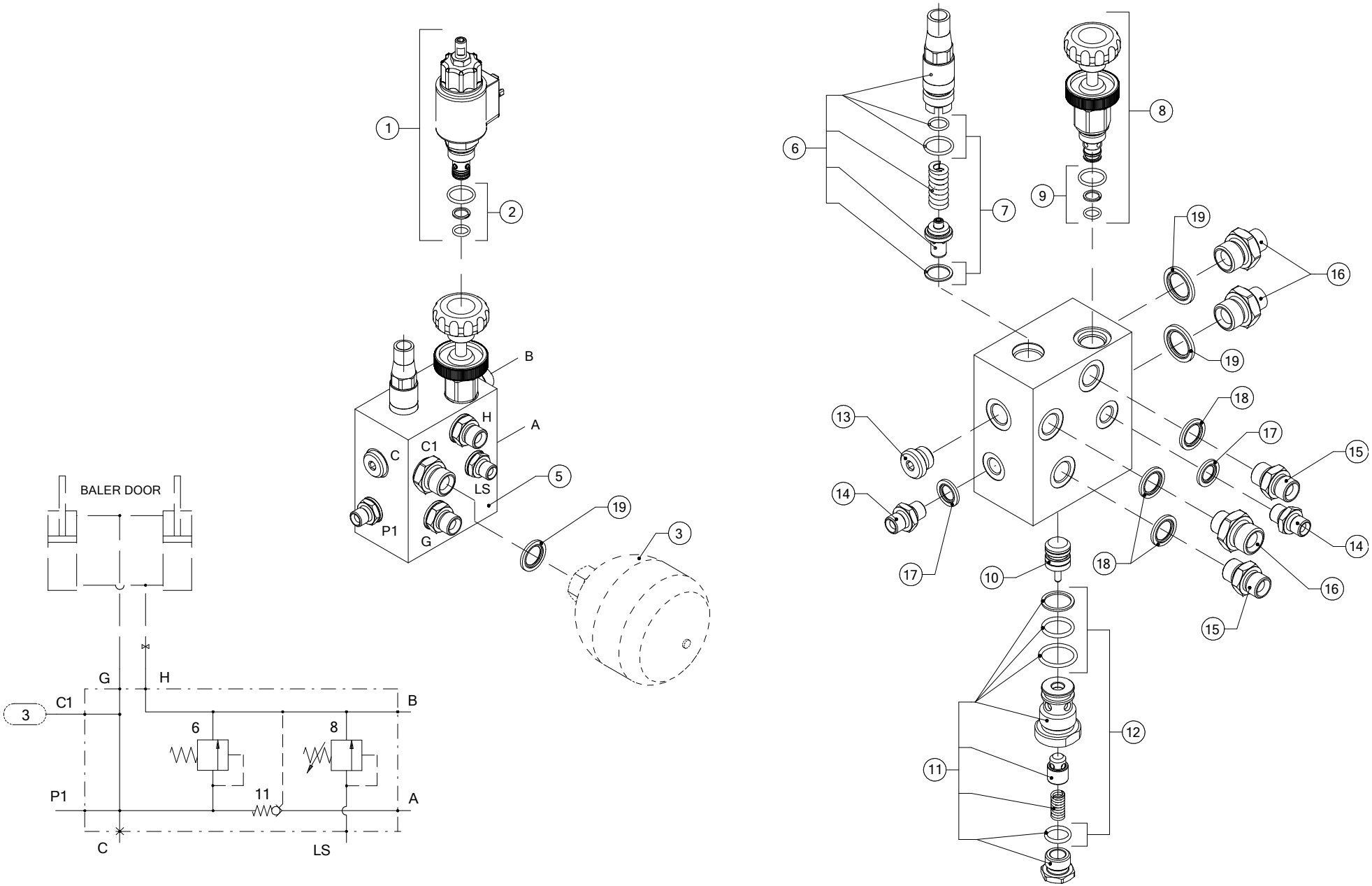

No.	Part No	Description	Qty
1	CVA00317	VALVE PROP RELIF 175BAR CTE *USED ON F560/F5600 ONLY - THIS IS NOT PART OF ITEM 5 & MUST BE ORDERED SEPARATELY*	1
2	REP00063	REPAIR KIT FOR DOOR VALVE F560/F5600 *USED ON F560/F5600 ONLY - RESOLVES HYDRAULIC CREEP IN BACK DOOR ON F560/F5600*	1
3	CVA00151	ACCUMULATOR 0.075 L 50 BAR *USED ON F56 SERIES MACHINES ONLY - MUST BE ORDERED SEPARATELY*	1
3	CVA00379	ACCUMULATOR 0.16L 75 BAR *USED ON FUSION MACHINES ONLY - MUST BE ORDERED SEPARATELY*	1
5	CVA00239	VALVE ASY BALER DOOR 2004+ MODEL *INCLUDES ITEMS 6 THROUGH 19 [DOES NOT INCLUDE ITEMs 1 TO 3]*	1
6	CVA00560	RELIEF VALVE ASSY	1
7	CSE00615	SEAL KIT FIXED RELIEF CVA00560	1
8	CVA00251	VALVE RELIEF CTE FOR CVA00239	1
9	CSE20031	SEAL KIT BALE DENSITY VALVE KNOB *REPLACES CSE00616*	1
10	CVA00562	PISTON	1
11	CVA00269	CHECK VALVE CARTRIDGE	1
12	CSE00618	SEAL KIT CHECK VALVE CVA00269	1
13	CVA00561	BLANKING CAP 3/8" (OLEOSTAR)	1
14	CHY02010	ADAPTOR 1/4" BSP M/M	2
15	CHY02002	ADAPTOR 3/8" BSP M/M	2
16	CHY02008	ADAPTOR 1/2" M 3/8" M	2
17	CHY00015	WASHER DOWTY 1/4"	2
18	CHY00020	WASHER DOWTY 3/8"	3
19	CHY00053	WASHER DOWTY 1/2"	3

No.	Part No	Description	Qty

Hydraulic valve chamber door CVA00428 [Used on Fusion 3 Plus from Serial No 659744] (974)

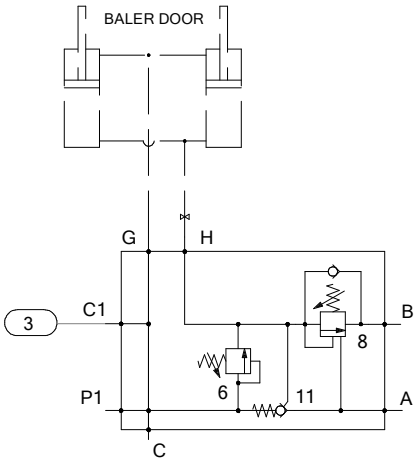

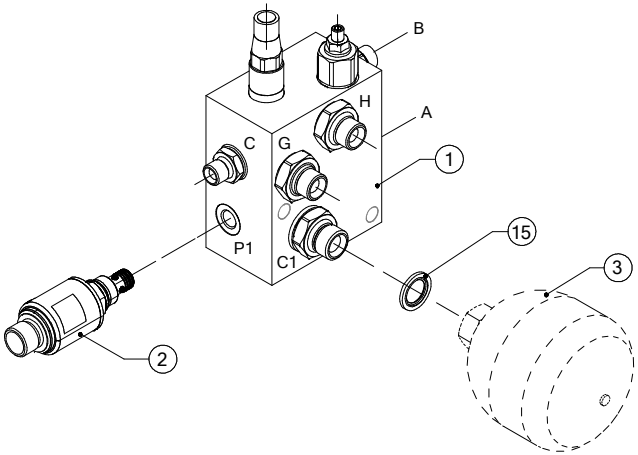

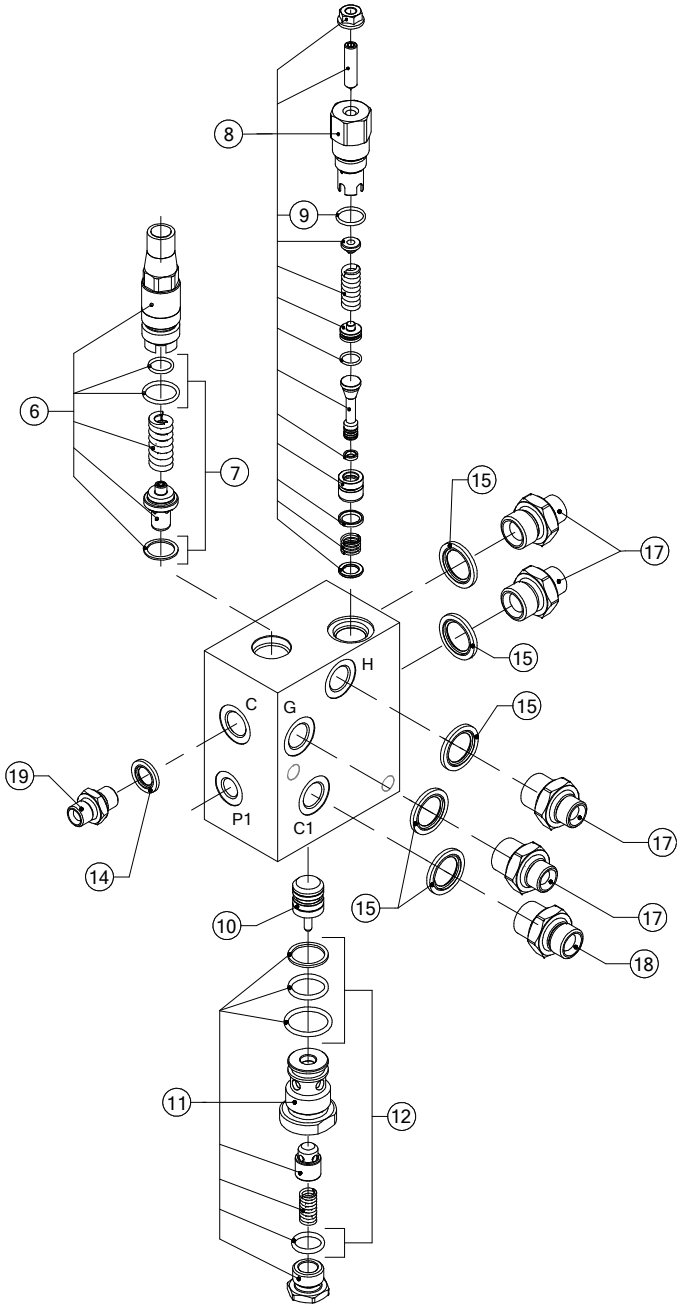

No.	Part No	Description	Qty
1	CVA00428	BALER DOOR VALVE C/W OVERCENTRE *INCLUDES ITEMS 5 THROUGH 19 [DOES NOT INCLUDE ITEMs 2 & 3]*	1
2	CEL00304	PRESSURE TRANSMITTER 0-250BAR M12 *MUST BE ORDERED SEPARATELY*	1
3	CVA00379	ACCUMULATOR 0.16L 75 BAR *MUST BE ORDERED SEPARATELY*	1
6	CVA00560	RELIEF VALVE ASSY	1
7	CSE00615	SEAL KIT FIXED RELIEF CVA00560	1
8	CVA00668	VALVE OVER CENTRE	1
9	CSE00164	O-RING 70 SH NBR 15.60X1.78	1
10	CVA00562	PISTON	1
11	CVA00269	CHECK VALVE CARTRIDGE	1
12	CSE00618	SEAL KIT CHECK VALVE CVA00269	1
14	CHY00020	WASHER DOWTY 3/8	1
15	CHY00053	WASHER DOWTY 1/2	6
17	CHY02008	ADAPTOR 1/2 M 3/8 M	4
18	CHY02013	ADAPTOR 1/2 BSP M/M	1
19	CHY02032	ADAPTOR 1/4 M 3/8 M	1

No.	Part No	Description	Qty

Hydraulic rams chamber door (884)

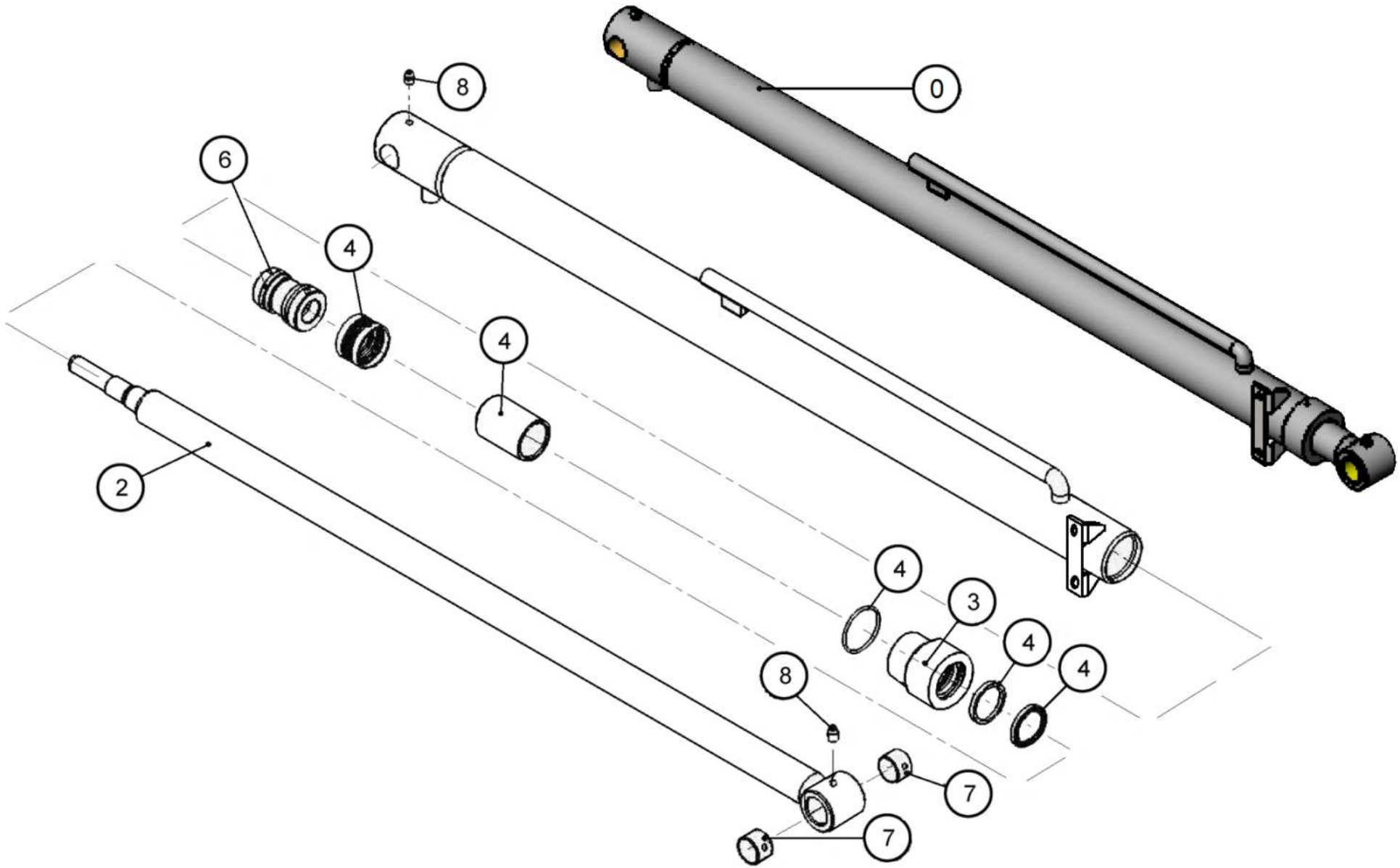

No.	Part No	Description	Qty
0	CRA00293	RAM 45X35X740 TOP DOOR FUSION 3 PLUS	2
USED FROM SERIAL No 659744 ONWARDS			
0a	CSE00293	SEAL KIT 45X35 FOR CRA00293	2
SEAL KIT 45X35 FOR CRA00293			
0	CRA00264	HYDRAULIC RAM COMPLETE ASSEMBLY	2
QTY=2 FROM SERIAL No 659050 TO 659743 (USED ON BOTH SIDES) PRIOR TO THIS QTY=1 AS USED ONLY ON LH SIDE			
0	CRA00701	RAM DOOR WITH TRANSDUCER FUS	1
TRANSDUCER RAM (WITH ELEC CONN) USED UP TO SERIAL No 659049 ON RH SIDE OF MACHINE ONLY (NOT SHOWN)			
0b	UWP00204	ULTRASONIC SENSOR KIT FUSION 3 PLUS	1
CONVERTS MACHINES PRIOR TO SERIAL No 659050 FROM TRANSDUCER TO ULTRASONIC (INCLUDING SOFTWARE)			
1	CEL00947	ULTRASONIC SENSOR, SN-300MM	1
ULTRASONIC SENSOR USED ON STD RAM CRA00264 ON RH SIDE OF MACHINE FROM SERIAL No 659050 (NOT SHOWN)			
1a	CZC02602	3MM SENSOR MOUNTING PLATE	1
USED WITH CEL00947 FROM SERIAL No 659050 ONWARDS (NOT SHOWN)			
1b	CZC02603	3MM SENSOR TARGET PLATE PART	1
1c	CZD02927	4MM SENSOR TARGET PLATE	1
1d	CFA00052	SETSCREW M8X20 ZP	2
1e	CFA00054	SETSCREW M6X60 Z/P	1
2	CRA00008	RAM ROD FOR CRA00264	1
REPLACEMENT PART FOR STANDARD RAM CRA00264 ONLY			
3	CRA00009	SEAL GLAND	1
REPLACEMENT PART FOR STANDARD RAM CRA00264 ONLY			
4	CSE00151	CUSHIONS & SEAL KITS FOR BOTH RAMS	1
THIS KIT CONTAINS CUSHIONS & SEALS FOR 2 RAMS OF EITHER TYPE			
6	CRA00013	SEAL GLAND	1
REPLACEMENT PART FOR STANDARD RAM CRA00264 ONLY			
7	CBR00040	BEARING GLACIER PM 2520 DX	2
8	CFA00590	GREASE NIPPLE 1/8" BSP ST	2

No.	Part No	Description	Qty

Hydraulic rams pick-up reel CRA00186 (182)

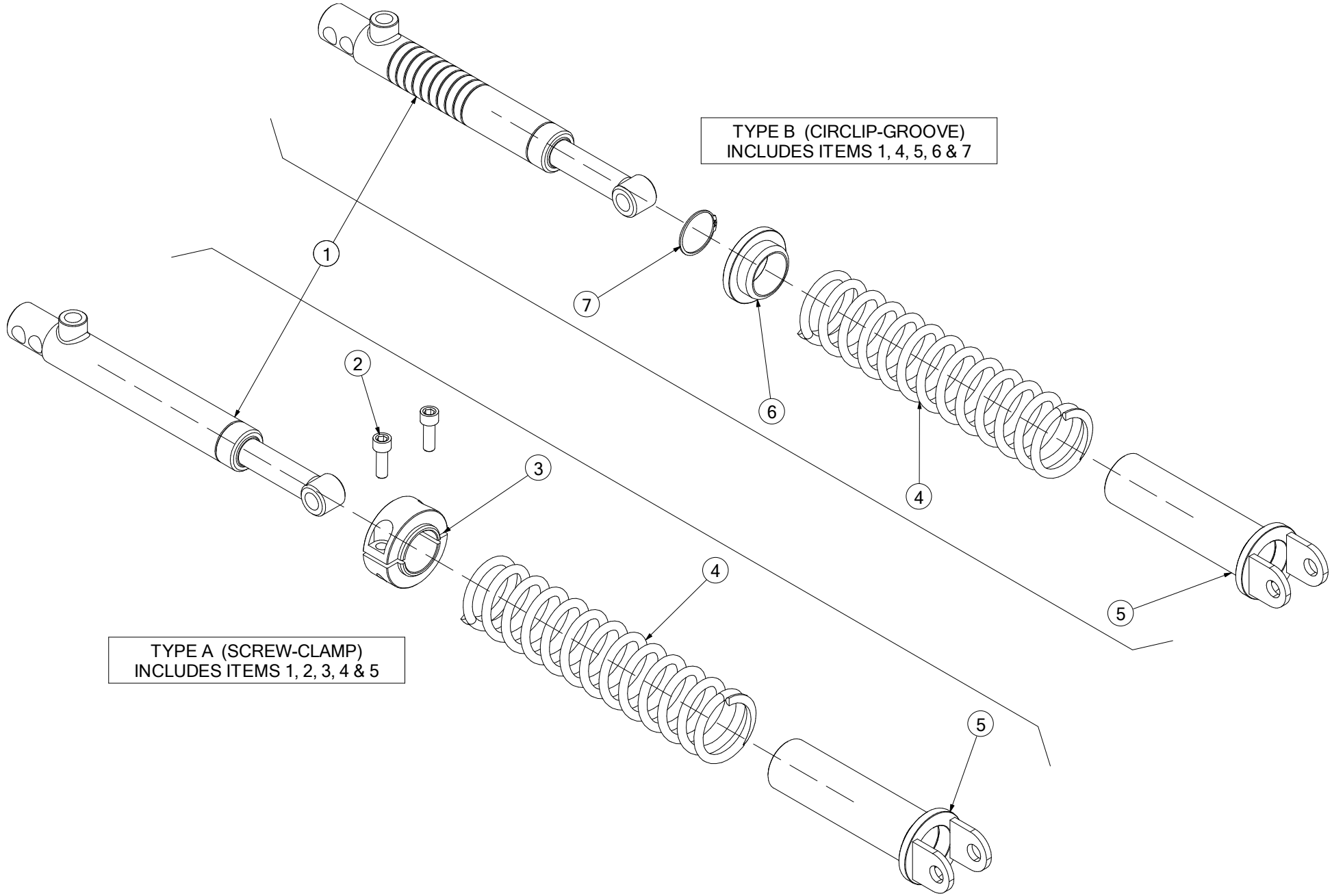

No.	Part No	Description	Qty
1	CRA00186	RAM PICKUP BALER	1
COMPLETE RAM ASSEMBLY (MAY BE TYPE A OR TYPE B) CAN ALSO USE CRA00292 AS A DIRECT REPLACEMENT			
1	CRA00292	RAM PICK UP REEL (CAMLESS)	1
MUST BE USED WITH CAMLESS PICK-UP (CAN ALSO BE USED ON STD PICK-UP INSTEAD OF CRA00186)			
2	CFA00602	SETSCREW M10X30 SOC CAP Z/P	2
RAM TYPE A ONLY			
3	ACH00405	SPRING RETAINER RAM PICKUP	1
RAM TYPE A ONLY			
4	CSG00037	SPRING COMP 8X67X300X14	1
5	ACH00404	SPRING RETAINER PICKUP	1
6	CPT00073	SPRING RETAINER FOR CRA00186	1
RAM TYPE B ONLY			
7	CFA00551	CIRCLIP 40MM EXTERNAL	1
RAM TYPE B ONLY			

No.	Part No	Description	Qty

Hydraulic rams cut & hold CRA00074 (549)

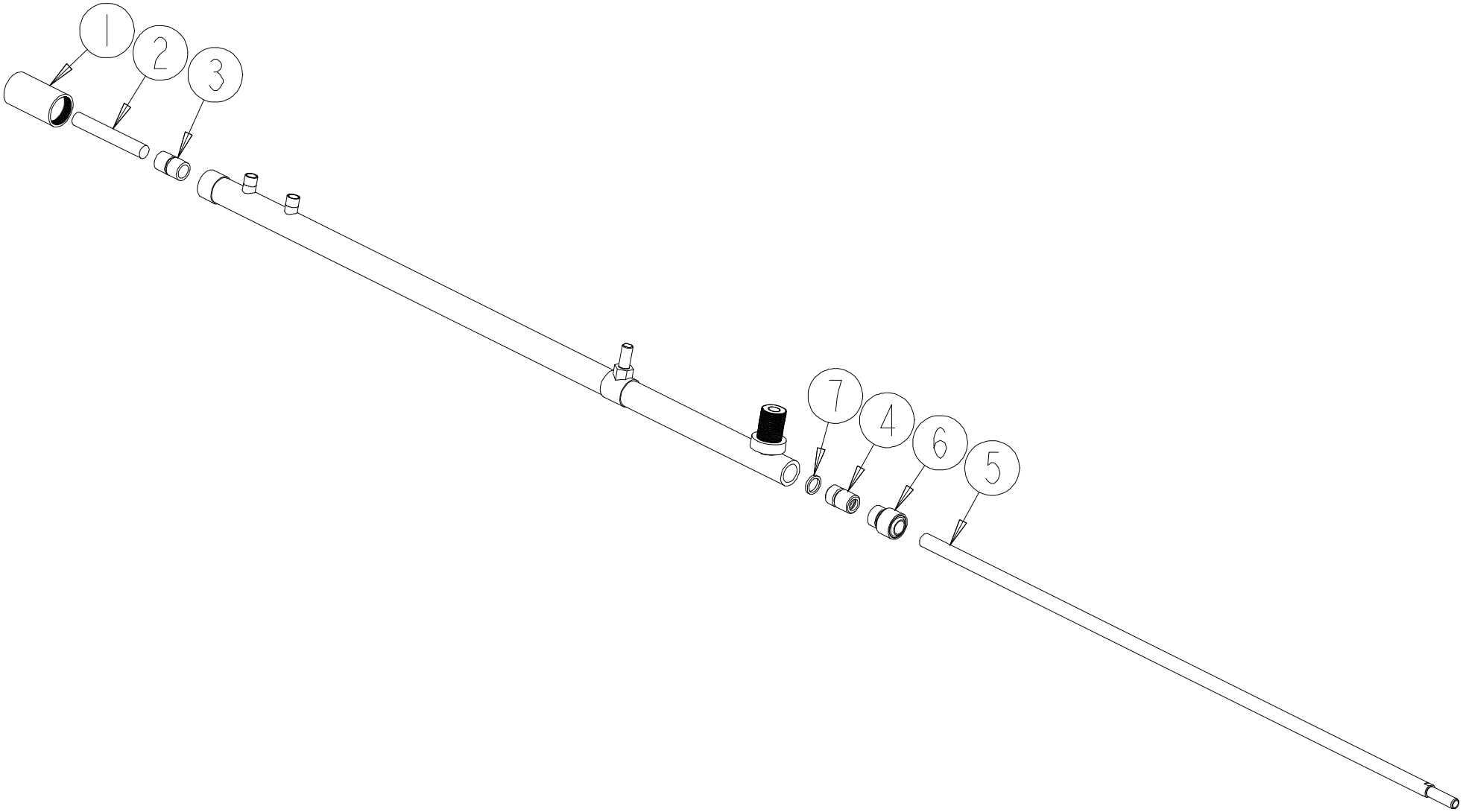

No.	Part No	Description	Qty
0	CRA00074	RAM CUT & HOLD COMPLETE	2
1	CRA00106	GLAND FOR CRA00074 BOTTOM	1
2	CRA00104	RAM ROD BOTTOM FOR CRAOO074	1
3	CRA00102	RAM PISTON FOR CRA00074 BOTTOM	1
4	CRA00101	RAM PISTON FOR CRA00074 TOP	1
5	CRA00103	RAM ROD TOP FOR CRA00074	1
6	CRA00105	SEAL GLAND TOP FOR CRA00115	1
7	CSE00074	SEAL KIT RAM CUT&HOLD	1

No.	Part No	Description	Qty

Hydraulic rams bale tip cradle CRA00558 (551)

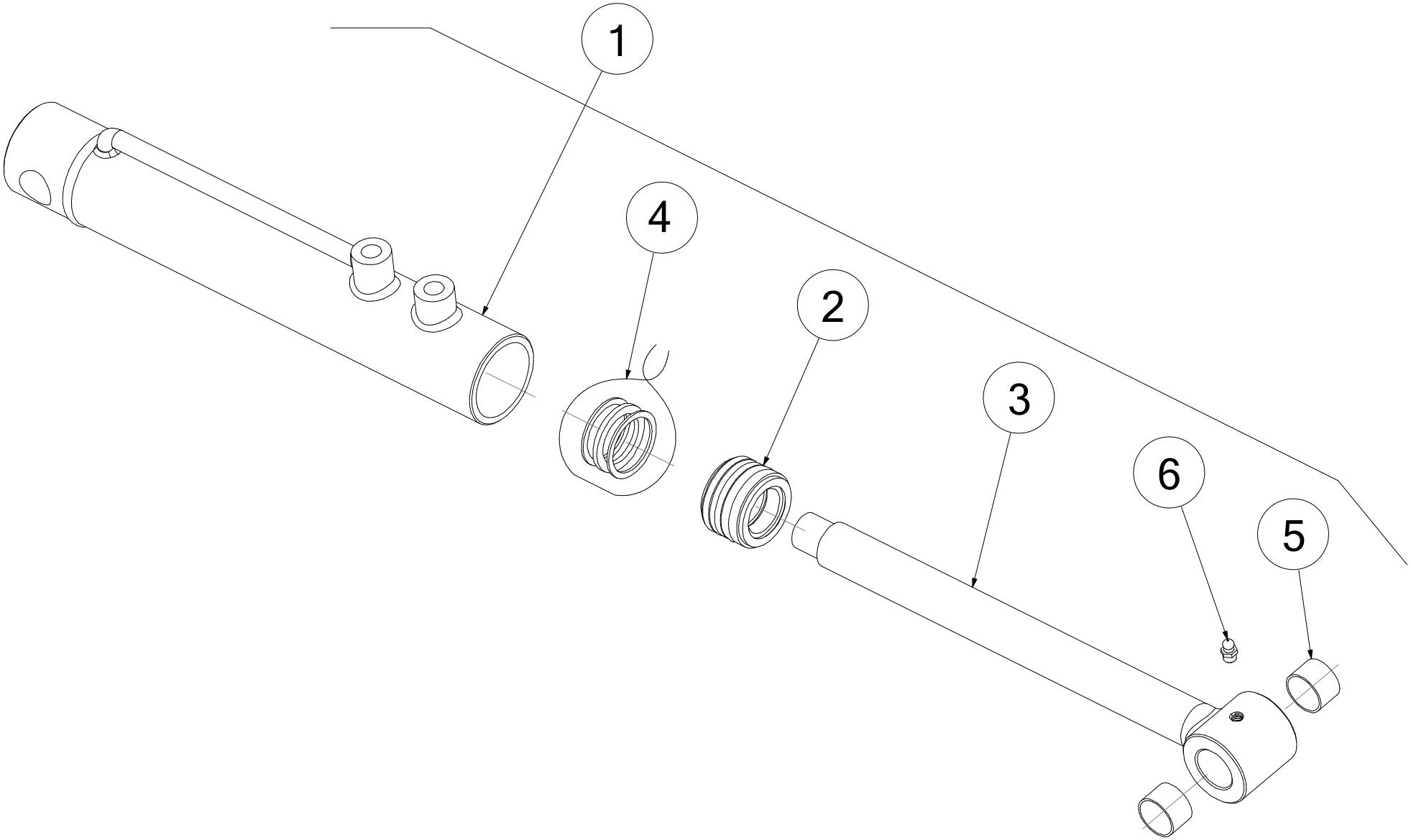

No.	Part No	Description	Qty
1	CRA00558	RAM 50X30X228 ROLLER TIP CRADLE FUSION	1
COMPLETE ASM (INCLUDES ITEMS 2, 3, 4, 5 & 6)			
2	CRA00585	CRADLE RAM CAP FUSION 2	1
3	CRA00586	CRADLE RAM ROD FUSION 2	1
4	CSE00623	SEAL KIT FOR RAM CRA00558	1
INCLUDES INSTRUCTIONS			
5	CBR00040	BEARING GLACIER PM 2520 DX	2
6	CFA00118	GREASE NIPPLE M8X1.25 STRAIGHT	1

No.	Part No	Description	Qty

Oil & Grease systems 1 (552)

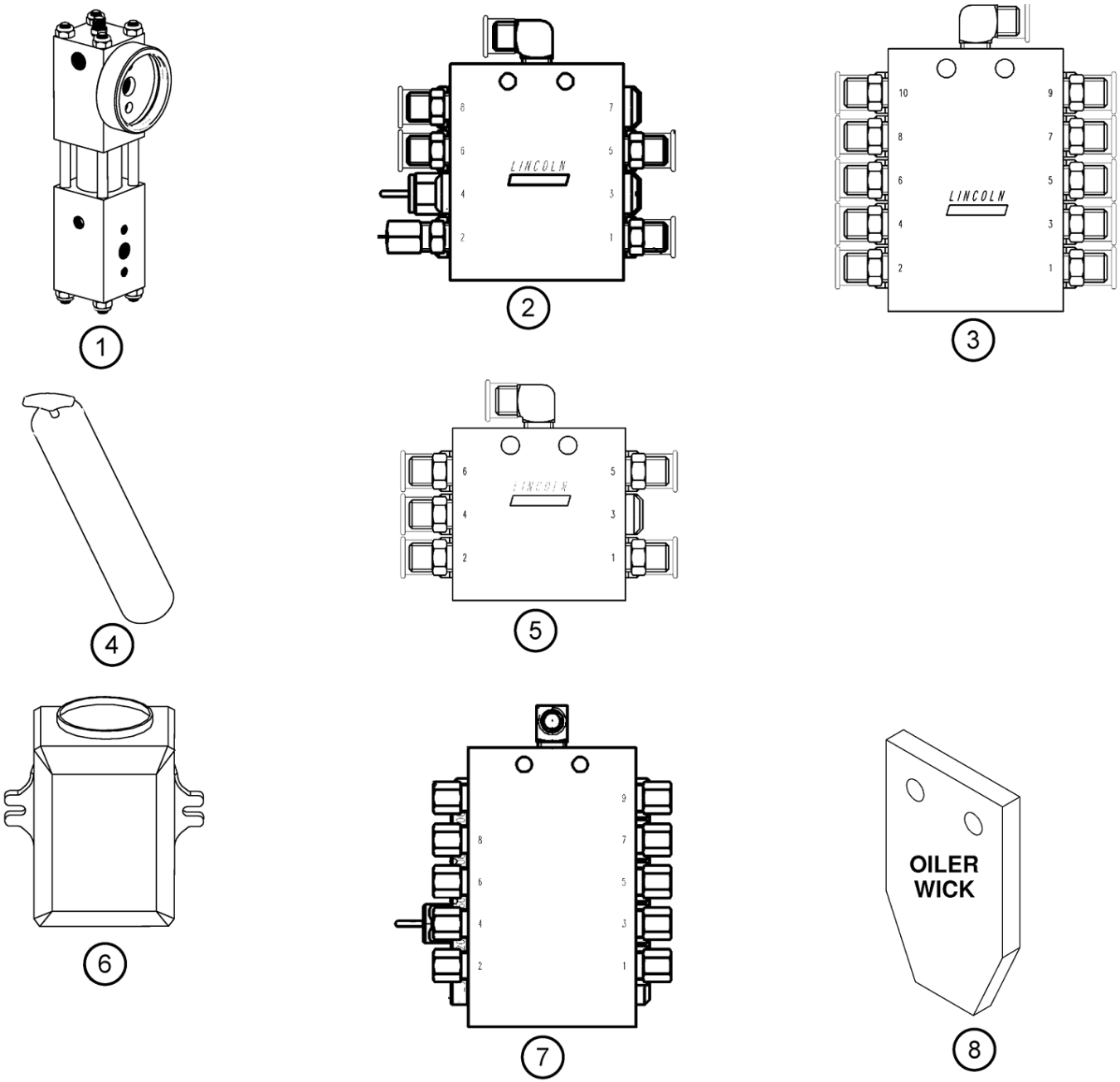

No.	Part No	Description	Qty
1	CVA00384	PUMP OIL/GREASE ALL FUSION	1
ROUND OIL/GREASE PUMP (REPLACES CVA00145 SQUARE OIL/GREASE PUMP SHOWN)			
2	CVA00167	8-WAY MASTER GREASE BLOCK	1
3	CVA00166	10-WAY GREASE BLOCK	3
4	CVA00184	GREASE CARTRIDGE	1
5	CVA00169	6-WAY GREASE BLOCK	2
6	CHY00212	OIL RESERVOIR	1
7	CVA00323	10-WAY MASTER OIL BLOCK	1
8	CHY01061	OIL WICK KIT FULL BALER RANGE	1
CONTAINS 4 SEPARATE WICKS FOR ANY MCHALE BALER MODEL (REPLACES CHY00609 SINGLE WICK)			

No.	Part No	Description	Qty

Oil & Grease fittings (553)

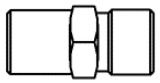

12

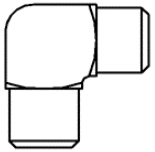

13

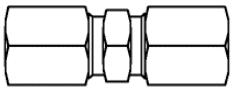

14

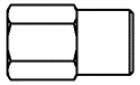

15

16

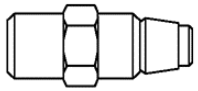

17

18

19

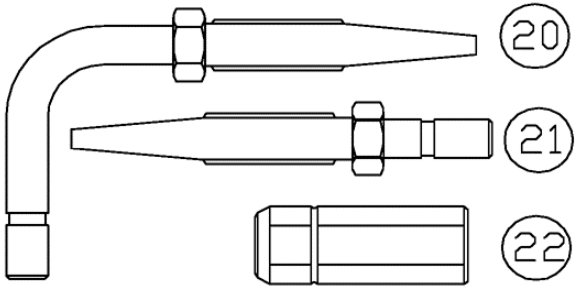

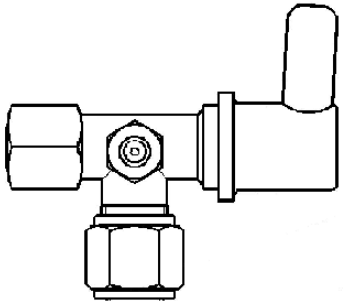

23

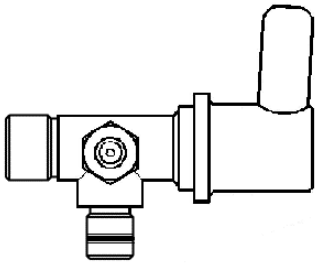

24

No.	Part No	Description	Qty
12	CFA00549	6LL FITTING STRAIGHT	1
13	CFA00543	6LL FITTING ELBOW	1
14	CFA00681	6LL UNION (COMPLETE)	1
15	CFA00682	COMPRESSION NUT	1
16	CFA00544	6LL COUPLING NUT	1
17	CFA00648	CHECK VALVE	1
18	CFA00683	BRASS OLIVE	1
19	CFA00545	STEEL OLIVE	1
20	CHY02323	HOSE STUD ELBOW	1
21	CHY02324	HOSE STUD STRAIGHT	1
22	CHY02325	THREADED SLEEVE	1
23	CHY02612	VALVE SVTE MANUAL GREASE NIPPLE	1
24	CHY02986	VALVE SVTS-350-R1/8 MANUAL GREASE NIPPLE	1

No.	Part No	Description	Qty

Oil & Grease systems 3 (554)

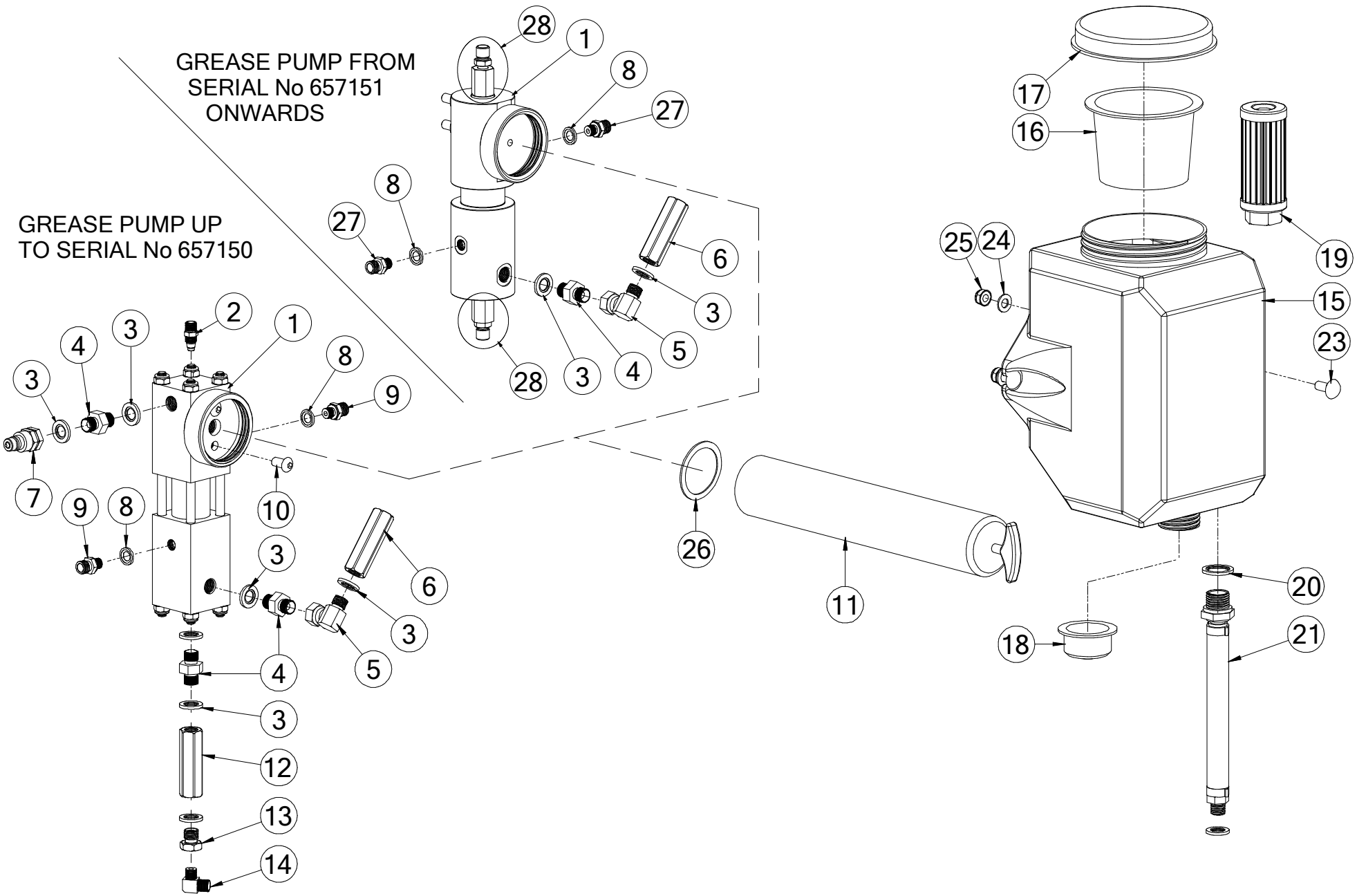

No.	Part No	Description	Qty
1	CVA00145	COMBINED GREASE AND OIL PUMP	1
SQUARE PUMP USED ON MACHINES UP TO SERIAL No 657150 (REPLACED BY CVA00384)			
1	CVA00384	PUMP OIL/GREASE ALL FUSION	1
ROUND PUMP USED ON MACHINES FROM SERIAL No 657151 (INCLUDES ITEM 28)			
2	CVA00172	VALVE CHECK 1/8" - M6LL BODY	1
USED WITH CVA00145 ONLY ON MACHINES UP TO SERIAL No 657150			
3	CHY00015	WASHER DOWTY 1/4"	7
4	CHY02010	ADAPTOR 1\4" BSP M/M	3
5	CHY02018	ADAPTOR 1/4" M/F 90DEG	1
6	CVA03111	VALVE NON-RET 1/4" 0 BAR	1
7	CHY02328	QUICK RELEASE 1/4" MALE	1
USED WITH CVA00145 ONLY ON MACHINES UP TO SERIAL No 657150			
8	CHY00195	WASHER DOWTY 1/8"	2
9	CHY00198	1/8" TO 12X1MM M-M BSP/METRIC	2
10	CFA00597	SETSCREW M8X16 BUTTON HEAD Z/P	2
11	CVA00184	GREASE GUN CARTRIDGE HOUSING	1
12	CVA03102	VALVE NON RET 1/4" 0.5 BAR	1
USED WITH CVA00145 ONLY ON MACHINES UP TO SERIAL No 657150			
13	CMH00941	CAP MACHINED 1/4" - 1/8"	1
14	CFA00543	6MM X 1/8" 90? GREASE FITTING	1
15	CHY00213	OIL RESERVOIR	1
16	CPL00079	FILTER OIL RESERVOIR	1
17	CPL00077	LID OIL RESERVOIR	1
18	CPL00078	CAP OIL RESERVOIR (BOTTOM)	1
19	CHY02330	ST SUCTION STRAINER	1
20	CHY00053	WASHER DOWTY 1/2"	1
21	CHY02329	OIL HOSE RESERVOIR - PUMP	1
23	CFA00506	SETSCREW M8X20 CUPHEAD SQ ZP	2
24	CFA00147	WASHER FLAT 8MM Z/P	4
25	CFA00132	NUT M8 NYLOC	2
26	CSE00613	SEAL GREASE CARTRIDGE	1
27	CHY02529	HYD ADAPTOR M/M 1/4" 1/8"	2
28	CVA00383	CHECK VALVE GREASE PUMP OUTLET	2
USED WITH CVA00384 ONLY ON MACHINES FROM SERIAL No 657151			

No.	Part No	Description	Qty

Oil & Grease systems 4 (555)

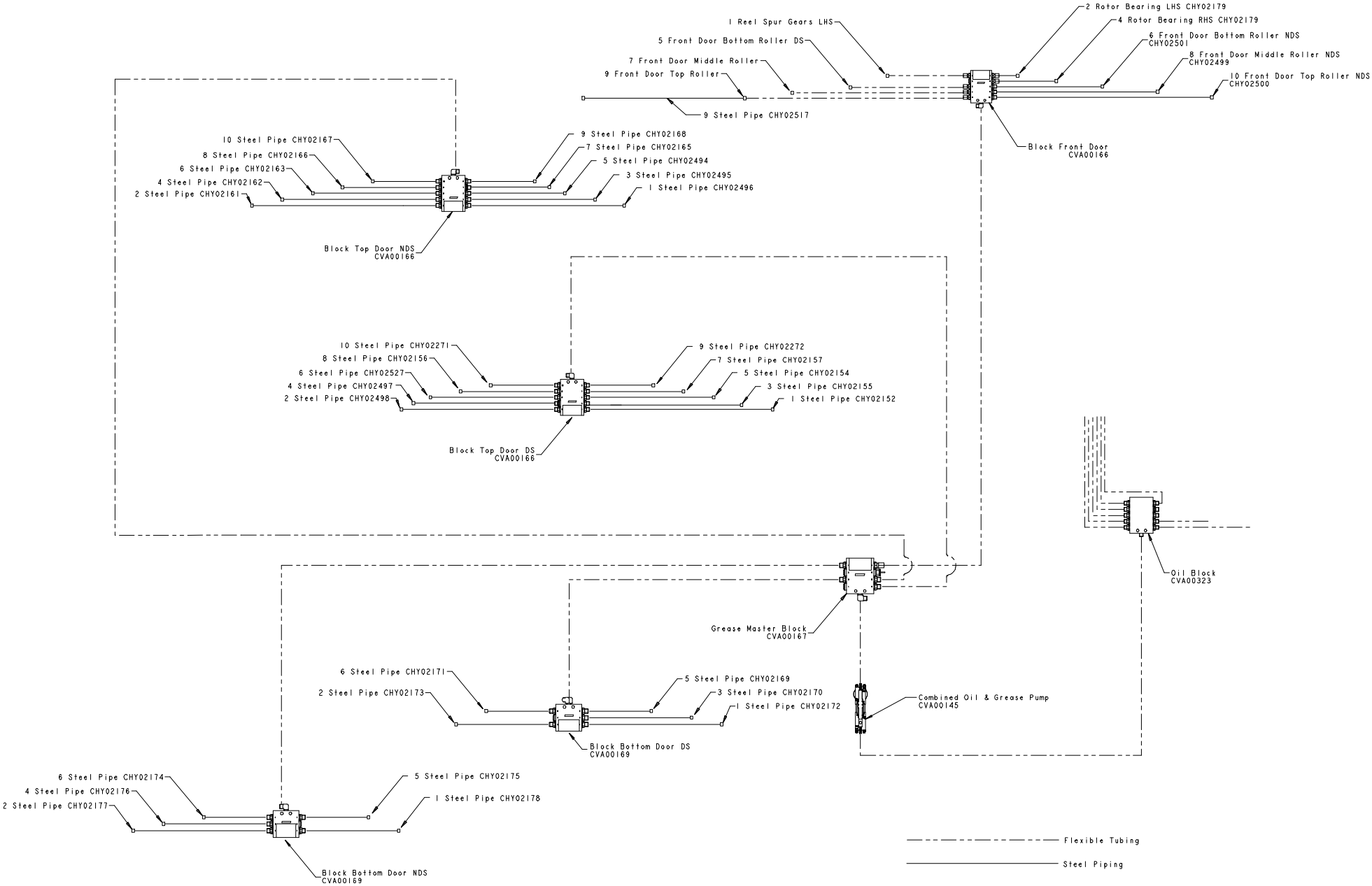

No.	Part No	Description	Qty
_	_	CVA00323 OIL BLOCK	0
Ports	Part Code	Description	0
1to10	CFA00682	COMPRESSION NUT	10
	CFA00683	BRASS OLIVE	10
_	_	CVA00167 GREASE MASTER BLOCK	0
Ports	Part Code	Description	0
1,2,5,	CFA00648	CHECK VALVE	5
	CFA00545	STEEL OLIVE	5
	CFA00544	COUPLING NUT	5
	CHY02324	HOSE STUD STRAIGHT	5
	CHY02325	THREADED SLEEVE	5
_	_	CVA00166 BLOCK FRONT DOOR	0
Ports	Part Code	Description	0
1&2, 4	CFA00648	CHECK VALVE	9
	CFA00545	STEEL OLIVE	9
	CFA00544	COUPLING NUT	9
_	_	CVA00166 BLOCK TOP DOOR DS	0
Ports	Part Code	Description	0
1to10	CFA00648	CHECK VALVE	10
	CFA00545	STEEL OLIVE	10
	CFA00544	COUPLING NUT	10
_	_	CVA00166 BLOCK TOP DOOR NDS	0
Ports	Part Code	Description	0
1 to 1	CFA00648	CHECK VALVE	10
	CFA00545	STEEL OLIVE	10
	CFA00544	COUPLING NUT	10
_	_	CVA00169 BLOCK BOTTOM DOOR DS	0
Ports	Part Code	Description	0
1,2,3,	CFA00648	CHECK VALVE	5
	CFA00545	STEEL OLIVE	5
	CFA00544	COUPLING NUT	5
_	_	CVA00169 BLOCK BOTTOM DOOR NDS	0
Ports	Part Code	Description	0
1,2,4,	CFA00648	CHECK VALVE	5
	CFA00545	STEEL OLIVE	5
	CFA00544	COUPLING NUT	5

No.	Part No	Description	Qty

Oil & Grease systems 5 (556)

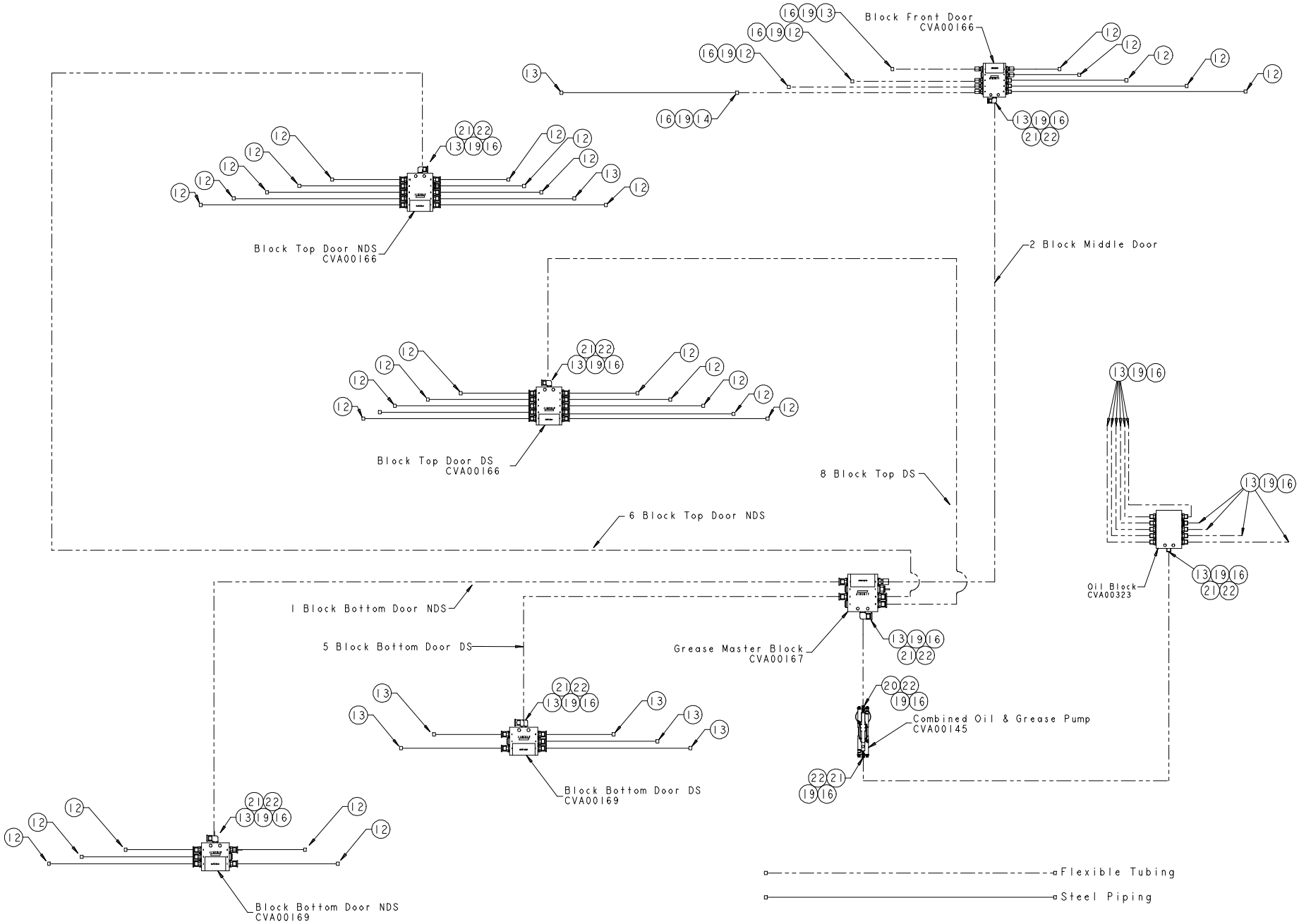

No.	Part No	Description	Qty
12	CFA00549	6LL FITTING STRAIGHT	0
13	CFA00543	6LL FITTING ELBOW	0
14	CFA00681	6LL UNION (COMPLETE)	0
16	CFA00544	6LL COUPLING NUT	0
19	CFA00545	STEEL OLIVE	0
20	CHY02323	HOSE STUD ELBOW	0
21	CHY02324	HOSE STUD STRAIGHT	0
22	CHY02325	THREADED SLEEVE	0

No.	Part No	Description	Qty

Electrical control [Up to Serial No 659743] (918)

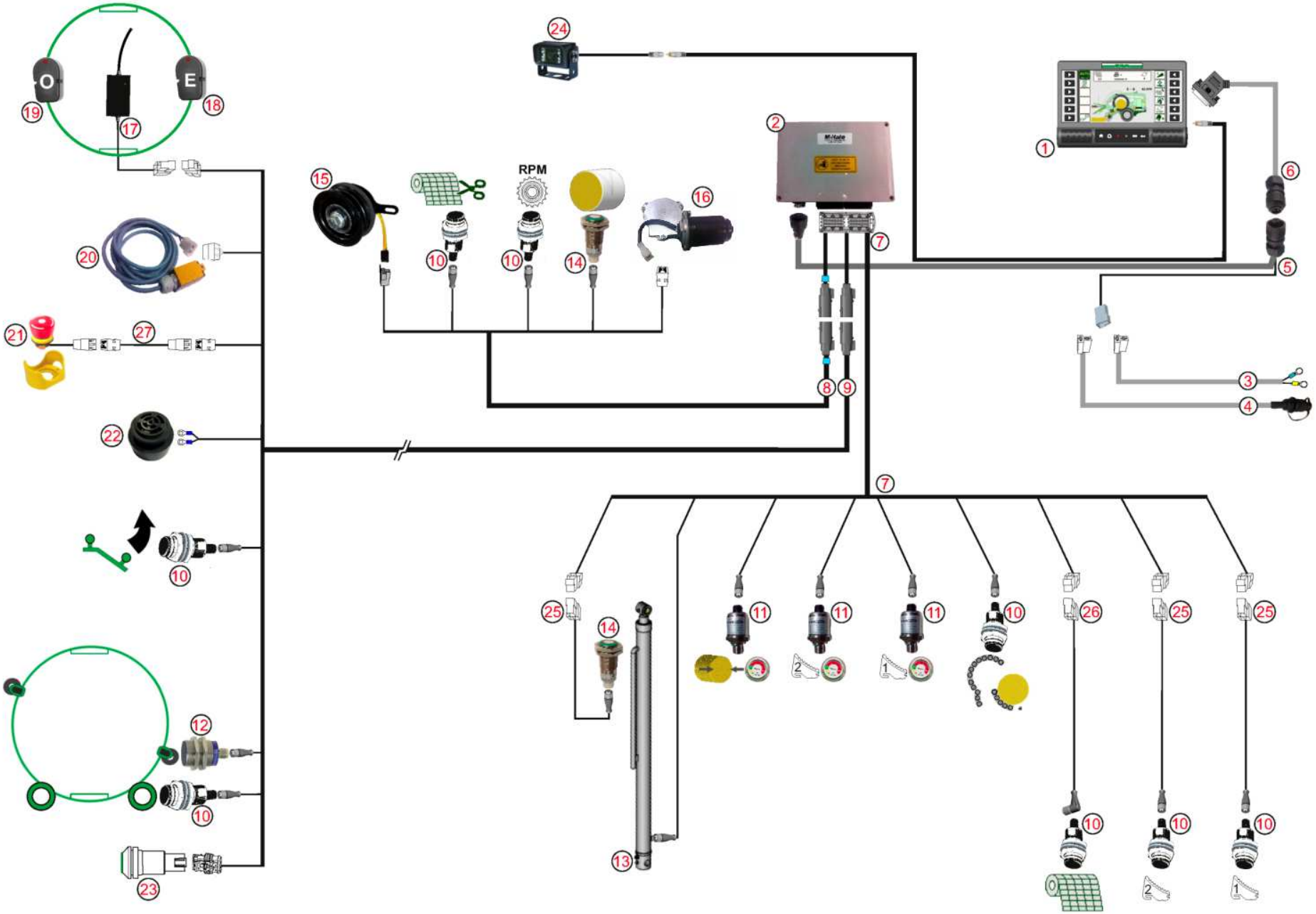

No.	Part No	Description	Qty
1	CEL00746	ISOCAN 1 RECON DISPLAY TERMINAL	1
USED UP TO SERIAL No 659078			
1	CEL00750	ISOCAN 2 DISPLAY TERMINAL	1
USED FROM SERIAL No 659079			
2	CEL00751	ISOCAN ECU	1
SUITABLE FOR ALL FUSION VARIO & FUSION 3 PRO/PLUS MACHINES USING ISOCAN CONTROL UNIT ONLY			
2	CEL01646	ISOCAN ECU ISOBUS W/USB PORT	1
SUITABLE FOR FUSION 3 PRO & FUSION 3 PLUS MACHINES USING ISOCAN OR ISOBUS CONTROL UNITS			
3	CEL00914	ISOCAN BATTERY POWER LEAD	1
ALTERNATIVE POWER SUPPLY TO EURO SOCKET			
4	CEL00853	EURO LEAD HEAVY DUTY ISOCAN 2WAY 90DEG	1
5	CEL00913	ISOCAN ECU LOOM W/CAMERA CABLE	1
REPLACES SEPARATE ECU LOOM CEL00779 & CAMERA LEAD CEL00903			
5a	CEL00952	ISOCAN EXTENSION FOR CEL00913	1
5b	CEL00961	CAMERA MALE PHONO CONNECTOR	1
5c	CEL00963	SOCKET CONNECTOR 6WAY PE CA6LD (USED IN CEL00913)	1
5d	CEL00964	BLANKING CAP CA00SD4	1
5e	CEL00903	CAMERA-ISOCAN SIGNAL CABLE	1
6	CEL00780	ISOCAN TERMINAL LOOM	1
6a	CEL00962	PIN CONNECTOR 6WAY PE CA6LS (USED IN CEL00780)	1
7	CEL00775	ISOCAN MAIN LOOM FUSION3	1
8	CEL00776	ISOCAN TOP DOOR LOOM FUSION3	1
9	CEL00777	ISOCAN REAR LOOM FUSION3	1
10	CEL00767	SENSOR M18 PROX M12 PLUG	8
10a	CFA02220	WASHER SERATED M18 SENSOR	16
11	CEL00304	PRESSURE SENSOR	3
12	CEL00768	SENSOR M30 PROX M12 PLUG	1
13	CRA00721	TRANSDUCER SPARE PART OF CRA00701	1
REPLACEMENT TRANSDUCER INSERT FOR RAM CRA00701 ON RH SIDE OF MACHINE UP TO SERIAL No 659049 ONLY			
13	UWP00204	ULTRASONIC SENSOR KIT FUSION 3 PLUS	1
KIT TO CONVERT FROM TRANSDUCER TO ULTRASONIC (INCLUDES SOFTWARE) MACHINES UP TO SERIAL No 659049			
14	CEL00947	ULTRASONIC SENSOR, SN-300MM	2
1 USED WITH STD RH RAM FROM SERIAL No 659050 & 1 USED TO DETECT TO DETECT FILM FROM SERIAL No 659536			
14a	CFA02220	LOCK WASHER FOR 18MM SENSOR	4
14b	CZC02602	3MM SENSOR MOUNTING PLATE	1
USED TO MOUNT ULTRASONIC SENSOR TO CHAMBER RAM ON RH SIDE			
14c	CZC02603	3MM SENSOR TARGET PLATE PART	1
14d	CZD02927	4MM SENSOR TARGET PLATE	1
14e	CFA00052	SETSCREW M8X20 Z/P	2
14f	CFA00054	SETSCREW M6X60 Z/P	1
15	CEL00259	MAGNETIC CLUTCH UNIT 12V	1
16	CEL00648	MOTOR NET CUT UNIT	1
17	CEL00230	RECEIVER FILM BREAK	1
18	CEL00221	DISPENSER CAP EVEN	1
18a	CEL01610	BATTERY FILM TRANSMITTER MK2	1
18b	CGD00465	TRANSMITTER MK2 PLASTIC HOUSING	1
19	CEL00222	DISPENSER CAP ODD	1
19a	CEL01610	BATTERY FILM TRANSMITTER MK2	1
19b	CGD00465	TRANSMITTER MK2 PLASTIC HOUSING	1
20	CEL00820	SWITCH ASSY SAFETY	1
21	CEL00809	E-STOP, 2WAY AMP CONNECTOR	1

No.	Part No	Description	Qty
21a	CEL00930	EMERGENCY STOP PROTECTIVE SHROUD	1
21b	CFA00083	WASHER FLAT 4MM Z/P	4
21c	CFA00392	NUT M4 NYLOC	2
21d	CFA02299	SCREW M4X20 DOME HEAD Z/P	2
22	CEL00796	WARNING BUZZER SINGLE TONE	1
23	CEL00659	INDEX BUTTON	1
24	CEL00900	COLOUR CAMERA	1
24a	CEL00902	EXTENSION 1.5M 3WAY TO 2WAY	1
25	CEL00926	ADAPTOR 3WAY AMP-M12 STRAIGHT 2M	1
26	CEL00817	KNIFE SENSOR ADAPTOR	1
27	CEL00959	FUSION E-STOP EXTENSION	1
USED FROM SERIAL No 659432			

Electrical control [From Serial No 659744] (968)

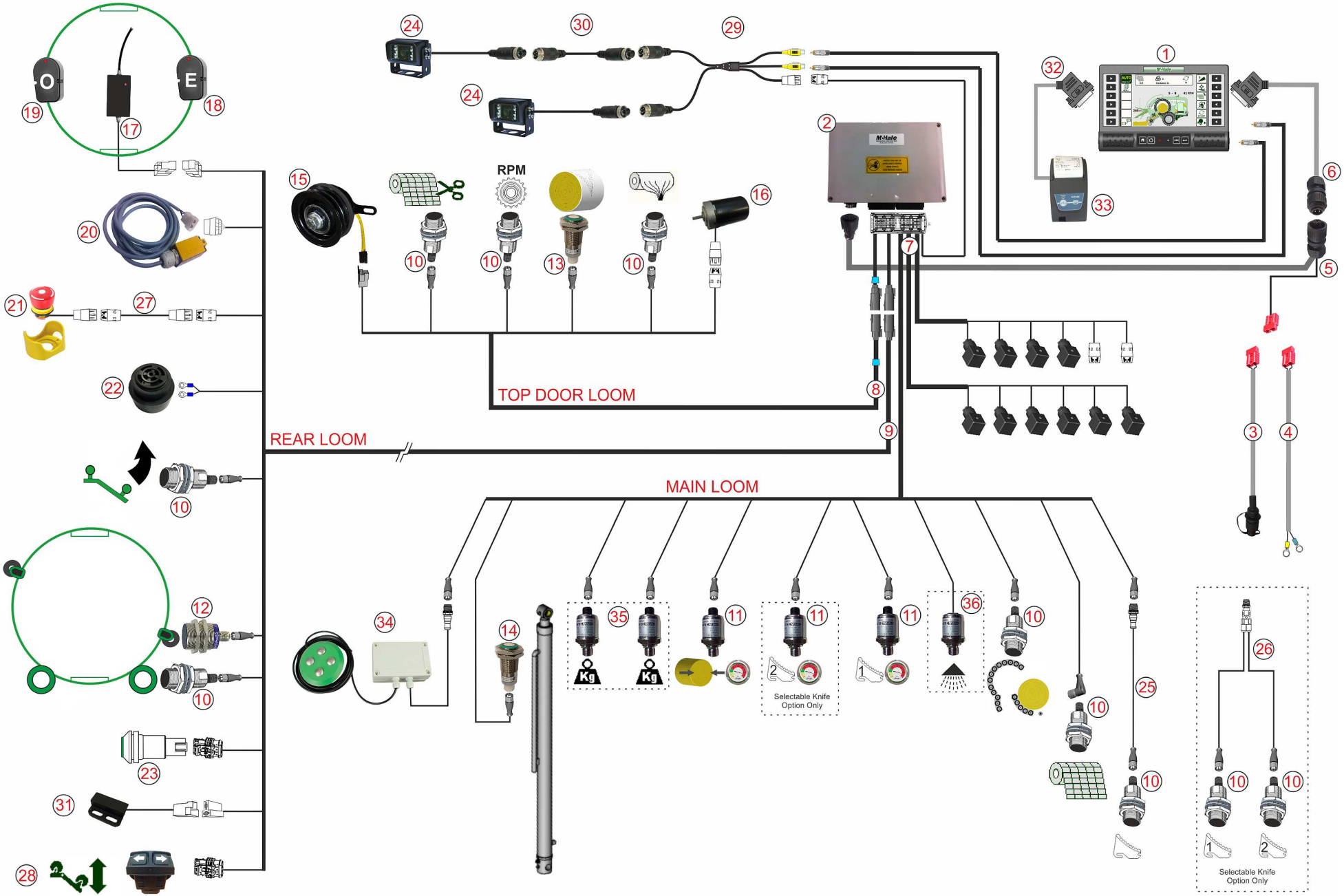

No.	Part No	Description	Qty
1	CEL00750	ISOCAN DISPLAY TERMINAL	1
2	CEL00751	ISOCAN ECU *SUITABLE FOR ALL FUSION VARIO & FUSION 3 PRO/PLUS MACHINES USING ISOCAN CONTROL UNIT ONLY*	1
2	CEL01646	ISOCAN ECU ISOBUS W/USB PORT *SUITABLE FOR FUSION 3 PRO & FUSION 3 PLUS MACHINES USING ISOCAN OR ISOBUS CONTROL UNITS*	1
3	CEL00980	HEAVY DUTY EURO LEAD MK2	1
4	CEL00979	ISOCAN BATTERY POWER LEAD MK2 *ALTERNATIVE POWER SUPPLY TO EURO SOCKET*	1
5	CEL00978	ISOCAN ECU LOOM + CAMERA CABLE MK2 *CONTAINS 1 CAMERA CABLE - USED UP TO SERIAL No 662538 (REPLACES CEL00913)*	1
5	CEL01528	ISOCAN ECU LOOM + CAMERA CABLES MK3 *CONTAINS 2 CAMERA CABLES - USED FROM SERIAL No 662539*	1
5	KST00131	ISOBUS FUSION KIT *SEE DOCUMENT CLT01140 FUSION ISOBUS OVERVIEW IN 'SOFTWARE DOCUMENTS' SECTION FOR MORE INFO*	1
5a	CEL00952	ISOCAN EXTENSION FOR CEL00913	1
5b	CEL00961	CAMERA MALE PHONO CONNECTOR	1
5c	CEL00963	SOCKET CONNECTOR 6WAY PE CA6LD (USED IN CEL00978)	1
5d	CEL00964	BLANKING CAP CA00SD4	1
5e	CEL00903	CAMERA-ISOCAN SIGNAL CABLE	1
6	CEL00780	ISOCAN TERMINAL LOOM	1
6a	CEL00962	PIN CONNECTOR 6WAY PE CA6LS (USED IN CEL00780)	1
7	CEL01503	MAIN ECU LOOM MK2 FUSION3 +	1
8	CEL01504	TOP DOOR LOOM MK2 FUSION3 +	1
9	CEL00777	ISOCAN REAR LOOM FUSION3	1
10	CEL00767	SENSOR M18 PROX M12 PLUG	10
10a	CFA02220	WASHER SERATED M18 SENSOR	16
11	CEL00304	PRESSURE SENSOR	3
12	CEL00768	SENSOR M30 PROX M12 PLUG	1
13	CEL00947	ULTRASONIC SENSOR, SN-300MM *ULTRASONIC SENSOR USED TO DETECT WHEN FILM IS APPLIED TO BALE - FROM SERIAL No 659536*	1
14	CEL00947	ULTRASONIC SENSOR, SN-300MM *ULTRASONIC SENSOR USED ON STD RAM CRA00264 ON RH SIDE OF MACHINE FROM SERIAL No 659050*	1
14a	CFA02220	LOCK WASHER FOR 18MM SENSOR	2
14b	CZC02602	3MM SENSOR MOUNTING PLATE *USED TO MOUNT ULTRASONIC SENSOR TO CHAMBER RAM ON RH SIDE*	1
14c	CZC02603	3MM SENSOR TARGET PLATE PART	1
14d	CZD02927	4MM SENSOR TARGET PLATE	1
14e	CFA00052	SETSCREW M8X20 Z/P	2
14f	CFA00054	SETSCREW M6X60 Z/P	1
15	CEL00259	MAGNETIC CLUTCH UNIT 12V	1
16	CEL00991	MOTOR 12VOLT 2000RPM	1
17	CEL00230	RECEIVER FILM BREAK	1
18	CEL00221	DISPENSER CAP EVEN	1
18a	CEL01610	BATTERY FILM TRANSMITTER MK2	1
18b	CGD00465	TRANSMITTER MK2 PLASTIC HOUSING	1
19	CEL00222	DISPENSER CAP ODD	1
19a	CEL01610	BATTERY FILM TRANSMITTER MK2	1
19b	CGD00465	TRANSMITTER MK2 PLASTIC HOUSING	1
20	CEL00820	SWITCH ASSY SAFETY	1
21	CEL00809	E-STOP, 2WAY AMP CONNECTOR	1

No.	Part No	Description	Qty
21a	CEL00930	EMERGENCY STOP PROTECTIVE SHROUD	1
21b	CFA00083	WASHER FLAT 4MM Z/P	4
21c	CFA00392	NUT M4 NYLOC	2
21d	CFA02299	SCREW M4X20 DOME HEAD Z/P	2
22	CEL00796	WARNING BUZZER SINGLE TONE	1
23	CEL00659	INDEX BUTTON	1
24	CEL00900	COLOUR CAMERA *USED UP TO SERIAL No 662813*	1
24	CEL01533	COLOUR CAMERA MK2 *USED FROM SERIAL No 662814*	2
24a	KST00074	CAMERA MOUNTING KIT	1
25	CEL00927	M12 EXTENSION CABLE 1.7M *USED ON STANDARD MACHINE ONLY*	1
26	CEL00891	SELECTABLE KNIFE SENSOR ADAPTOR *USED ON SELECTABLE KNIFE MACHINE ONLY*	1
27	CEL00959	FUSION E-STOP EXTENSION	1
28	CEL00989	DOUBLE PUSH BUTTON SWITCH	1
29	CEL01532	TWIN CAMERA ADAPTER	1
30	CEL01556	CAMERA EXTENSION CABLE 3M	1
31	CEL01591	SIDE TIP SWITCH *USED ON MACHINES WITH SIDE-TIP FROM SERIAL No 664026 ONWARDS*	1
31a	CPL00260	SIDE TIP SENSOR SPACER PLATE	1
31b	CFA02379	SETSCREW M6X35 STAINLESS STEEL	2
31c	CFA02231	WASHER SERRATED 6MM	2
31d	CFA00144	WASHER FLAT 6MM Z/P	2
31e	CFA00131	NUT M6 NYLOC	2
32	CEL01594	ISOCAN PRINTER CABLE *OPTIONAL*	1
33	CEL01597	ISOCAN PRINTER *OPTIONAL*	1
33	KST00087	ISOCAN PRINTER KIT *COMPLETE KIT INCLUDING PRINTER, PRINTER CABLE, MOUNTING BRACKETS & FASTENERS*	1
34	KST00086	BALER MOISTURE SENSOR KIT F3+ *CAN ONLY BE FITTED TO MACHINES FROM SERIAL No 662550*	1
34a	CEL01589	MOISTURE SENSOR PAD	1
35	KST00110	FUSION BALE WEIGHING KIT *CAN ONLY BE FITTED TO MACHINES FROM SERIAL No 662550*	1
36	KST00128	FUSION ELECTRONIC ADDITIVE KIT	1

Isocan control unit (1078)

2

1

16

15

14

3

4

5

7

17

18

19

13

12

6

8

9

10

11

No.	Part No	Description	Qty
1	CEL00750	ISOCAN 2 DISPLAY TERMINAL	1
1	CEL00924	ISOCAN2 DISPLAY TERMINAL RECON	1
1	CEL00746	ISOCAN1 DISPLAY TERMINAL RECON	1
2	CEL00751	ISOCAN ECU	1
SUITABLE FOR ALL FUSION VARIO & FUSION 3 PRO/PLUS MACHINES USING ISOCAN CONTROL UNIT ONLY			
2	CEL00925	ISOCAN ECU RECONDITIONED	1
(RECON) SUITABLE FOR ALL FUSION VARIO & FUSION 3 PRO/PLUS MACHINES USING ISOCAN CONTROL UNIT ONLY			
2	CEL01646	ISOCAN ECU ISOBUS W/USB PORT	1
SUITABLE FOR FUSION 3 PRO & FUSION 3 PLUS MACHINES USING ISOCAN OR ISOBUS CONTROL UNITS			
3	CEL01512	ISOCAN SPEAKER	1
4	CEL00670	CONTROL UNIT STOP SWITCH	1
5	CEL00671	STOP SWITCH CONTACT BLOCK	1
6	CEL00397	ISOCAN DISPLAY ASSEMBLY	1
7	CEL00980	HEAVY DUTY EURO LEAD MK2	1
8	CEL00979	ISOCAN BATTERY POWER LEAD MK2	1
9	CEL00780	ISOCAN TERMINAL LOOM	1
10	CEL00952	ISOCAN EXT CABLE 3M	1
10	CEL01592	ISOCAN EXTENSION CABLE 11M	1
11	CEL00903	CAMERA-ISOCAN SIGNAL CABLE	1
12	CEL00945	USB MEMORY DRIVE 2GB	1
13	KST00070	CONTROL UNIT MOUNTING BRACKETS	1
14	CEL00962	PIN CONNECTOR 6WAY+PE CA6LS	1
15	CEL00963	SOCKET CONNECTOR 6WAY+PE CA6LD	1
16	CEL00964	BLANKING CAP - CA00SD4	1
17	CEL01597	ISOCAN PRINTER	1
(OPTIONAL)			
17	KST00087	ISOCAN PRINTER KIT	1
(OPTIONAL) COMPLETE KIT INCLUDING PRINTER, PRINTER CABLE, MOUNTING BRACKETS & FASTENERS			
18	CEL01638	ISOCAN PRINTER PAPER	1
19	CEL01594	ISOCAN PRINTER CABLE	1

No.	Part No	Description	Qty

Camera & monitor kit (1079)

No.	Part No	Description	Qty
1	CEL00961	CAMERA MALE PHONO CONNECTOR	1
2	CEL01371	RCA PHONO SOCKET FEMALE 2WAY	1
3	CEL01593	DOUBLE PHONO ADAPTOR	1
4	CEL01630	FUSE 250MA 5X20MM GLASS	1
4	CEL01631	FUSE 500MA 5X20MM GLASS	1
5a	CEL01609	ISOCAN - FENDT CAMERA ADAPTOR	1
5b	CEL01747	4 PIN - FENDT CAMERA ADAPTER	1
6	CEL01520	SECOND CAMERA POWER ADAPTER	1
7	CEL01585	PHONO TO CAMERA CONNECTOR	1
8	CEL01532	TWIN CAMERA ADAPTER	1
9	KST00074	CAMERA MOUNTING KIT	1
INCLUDES CONNECTOR CABLE (ITEM 9a)			
9a	CEL00034	LOOM POWER CCTV & AUTO CONT'	1
10	CEL00903	CAMERA-ISOCAN SIGNAL CABLE	1
11	CEL00900	COLOUR CAMERA MK1	1
12	CEL01541	CAMERA EXTENSION 5M HIGH-FLEX	1
13	KST00064	2ND CAMERA KIT ISOCAN	1
INCLUDES ITEMS 10, 11 & 12			
14	CEL01506	CAMERA MONITOR	1
15	CEL01550	CAMERA EXTENSION CABLE 10M	1
15	CEL01556	CAMERA EXTENSION CABLE 3M	1
16	CEL01533	COLOUR CAMERA MK2	1
17	KST00068	CAMERA & MONITOR KIT	1
INCLUDES ITEMS 14, 15 & 16			
18	CEL01655	QUAD CAMERA MONITOR	1
19	CEL00064	LOOM COBO WHITE CON EURO LEAD	1
20	CEL01550	CAMERA EXTENSION CABLE 10M	2
21	CEL01533	COLOUR CAMERA MK2	2
22	ATR00047	DOUBLE CAMERA BRACKET COMP ASSY	1
23	KST00100	DUAL CAMERA COMP KIT FRT MOWER	1
INCLUDES ITEMS 18, 19, 20, 21 & 22			

No.	Part No	Description	Qty

Electrical lighting kit [On Fusion 3 up to S No 659431 & Fusion Vario up to S No 900095] (816)

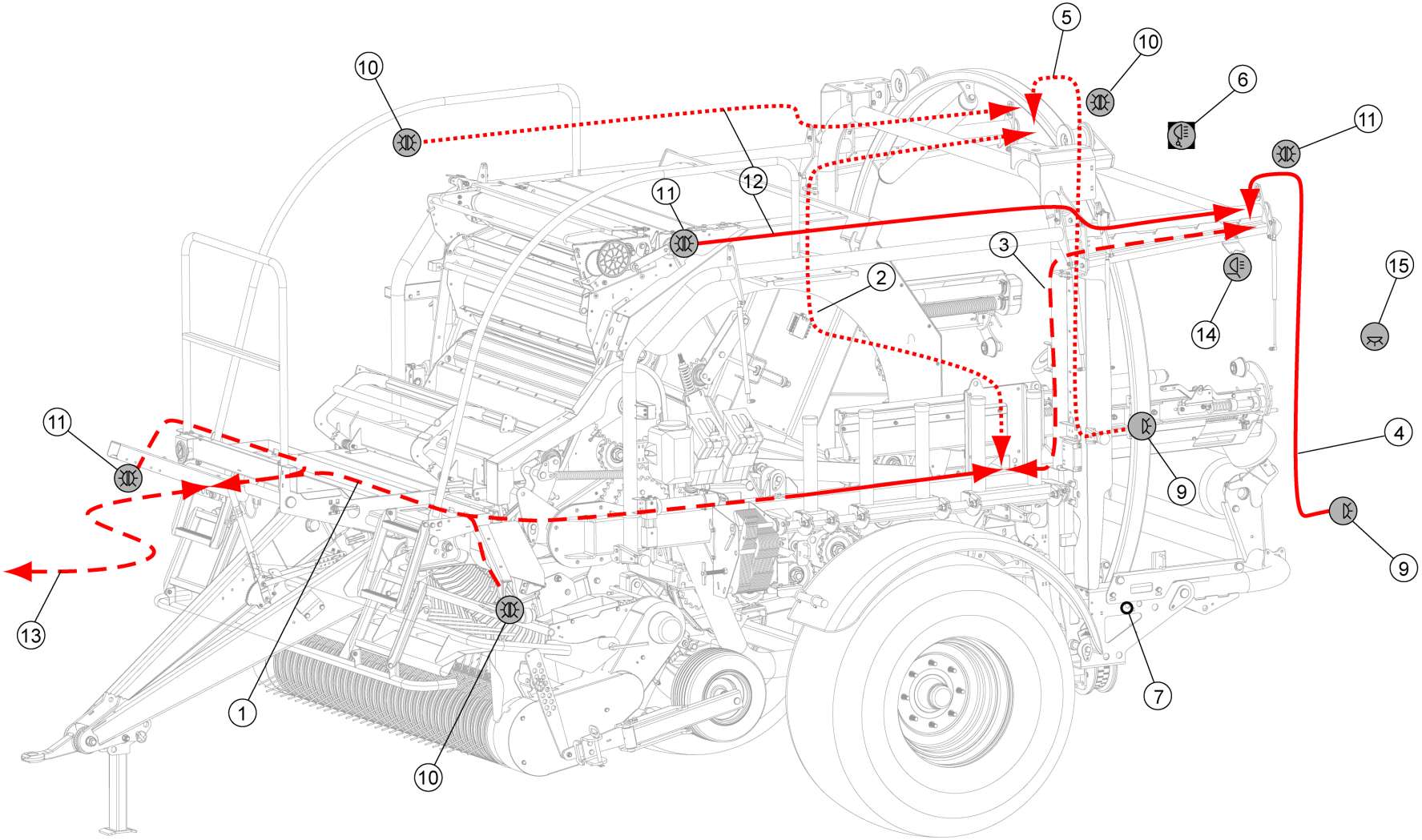

No.	Part No	Description	Qty
1	CEL00800	LIGHTING LOOM FUSION 3 MAIN	1
2	CEL00801	LIGHTING LOOM FUSION 3 CROSS	1
3	CEL00802	LIGHTING LOOM FUSION 3 LEFT	1
4	CEL00803	LIGHTING LOOM FUSION 3 LH PLUG	1
5	CEL00804	LIGHTING LOOM FUSION 3 RH PLUG	1
6	CEL00849	FIELD LAMP LED SQUARE 5X3W	1
OPTIONAL			
6a	CZC04715	3MM L LAMP MOUNTING PLATE	2
(NOT SHOWN) USED WITH ITEM 6 OPTION ONLY			
6b	CFA00052	SETSCREW M8X20 ZP	4
(NOT SHOWN) USED WITH ITEM 6 OPTION ONLY			
6c	CFA00147	WASHER FLAT 8MM ZP	8
(NOT SHOWN) USED WITH ITEM 6 OPTION ONLY			
6d	CFA00132	NUT M8 NYLOC Z/P	4
(NOT SHOWN) USED WITH ITEM 6 OPTION ONLY			
7	CEL00880	SWITCH ASM REAR FIELD LAMP LED	1
(INCLUDES LOOM) USED WITH ITEM 6 OPTION ONLY			
9	CEL00831	TAIL LIGHT CIRCULAR LED FUSION 3	2
10	CEL00842	MARKER LAMP STALK LHS FUSION 3	3
11	CEL00843	MARKER LAMP STALK RHS FUSION 3	3
12	CEL00832	LIGHTING LOOM EXTENSION UPPER MARKERS	2
OPTIONAL			
13	CEL00838	LIGHT LOOM EXT FUSION 3	1
14	CEL01529	LED WORK LAMP	1
REPLACES CEL00227 [ALSO ORDER BRACKET CZD04649 PRIOR TO S-No 662696 (FUSION 3) & S-No 900300 (VARIO)]			
15	CEL00823	REGISTRATION LIGHT FUSION 3	1
OPTIONAL			

No.	Part No	Description	Qty

Electrical lighting kit [On Fusion 3 from S-No 659432 & Fusion Vario from S-No 900096] (950)

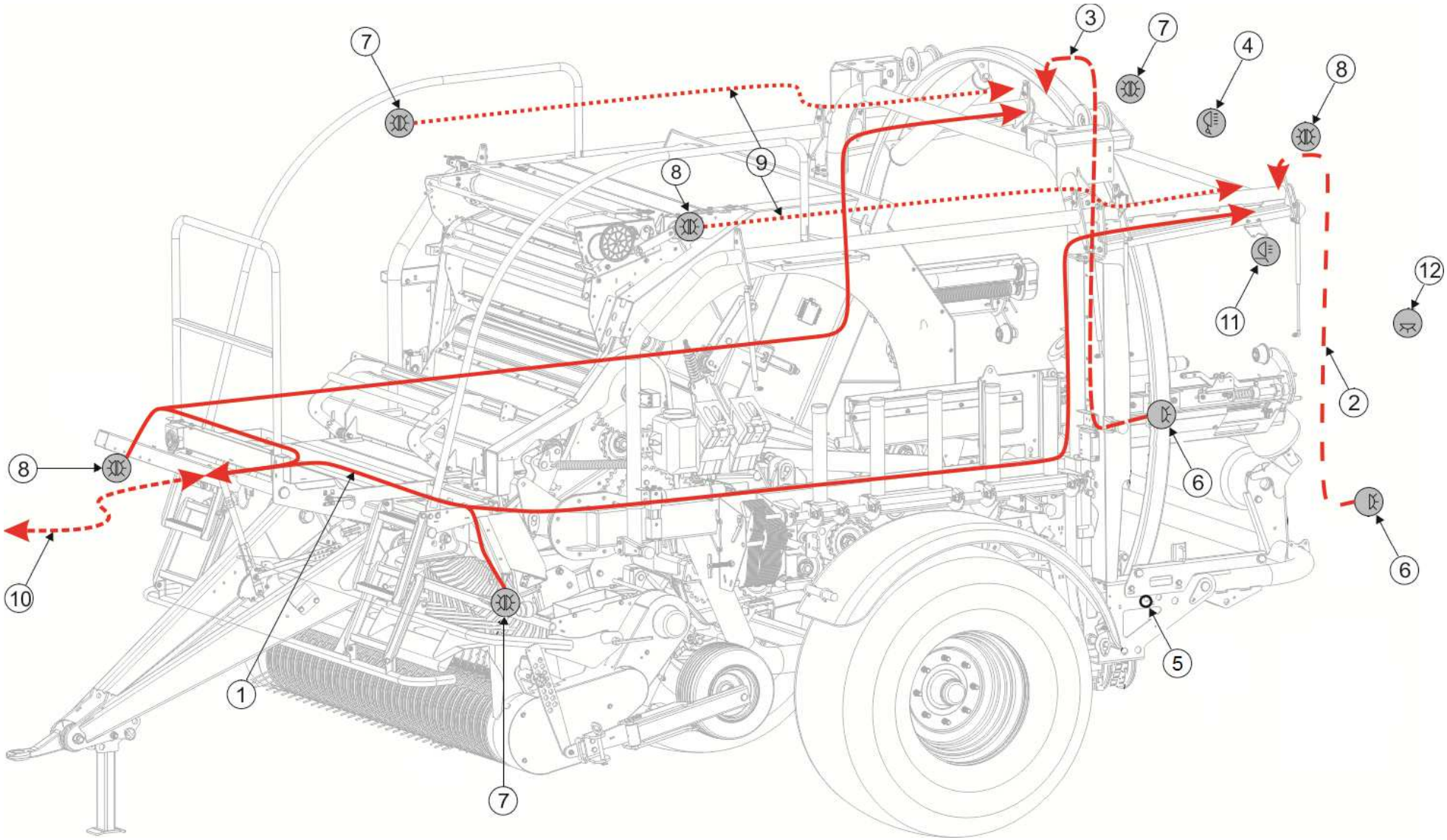

No.	Part No	Description	Qty
1	CEL00958	LIGHTING LOOM FUSION 3 MAIN	1
2	CEL00803	LIGHTING LOOM FUSION 3 LH PLUG	1
3	CEL00804	LIGHTING LOOM FUSION 3 RH PLUG	1
4	CEL00849	FIELD LAMP LED SQUARE 5X3W *OPTIONAL*	1
4a	CZC04715	3MM L LAMP MOUNTING PLATE *(NOT SHOWN) USED WITH ITEM 4 OPTION ONLY*	2
4b	CFA00052	SETSCREW M8X20 ZP *(NOT SHOWN) USED WITH ITEM 4 OPTION ONLY*	4
4c	CFA00147	WASHER FLAT 8MM ZP *(NOT SHOWN) USED WITH ITEM 4 OPTION ONLY*	8
4d	CFA00132	NUT M8 NYLOC Z/P *(NOT SHOWN) USED WITH ITEM 4 OPTION ONLY*	4
5	CEL00880	SWITCH ASM REAR FIELD LAMP LED *(INCLUDES LOOM) USED WITH ITEM 4 OPTION ONLY*	1
6	CEL00831	TAIL LIGHT CIRCULAR LED FUSION 3	2
7	CEL00842	LED MARKER LAMP STALK LHS	1
8	CEL00843	LED MARKER LAMP STALK RHS	1
9	CEL00832	LIGHTING LOOM EXT UPPER MARKERS *OPTIONAL*	2
10	CEL00838	LIGHT LOOM EXT FUSION 3	1
10a	CEL01505	LIGHT LOOM ADAPTER (AMERICA) *USED TO CONNECT LIGHTING ON MACHINES WITHIN THE USA & CANADA*	1
10b	CEL01587	7 PIN LIGHTING PLUG SAE J560	1
11	CEL01529	LED WORK LAMP *REPLACES CEL00227 [ALSO ORDER BRACKET CZC05704 PRIOR TO S-No 662696 (FUSION 3) & S-No 900300 (VARIO)]*	1
11a	CZD04649	4MM L REAR WORK LAMP BRACKET FUSION *BRACKET USED WITH LED WORK LAMP UP TO SERIAL No 662964 (FUSION 3) & SERIAL No 900359 (FUSION VARIO)*	1
11a	CZC05704	3MM L LAMP BRACKET FUSION *BRACKET USED WITH LED WORK LAMP FROM SERIAL No 662965 (FUSION 3) & SERIAL No 900360 (FUSION VARIO)*	1
12	CEL00823	REGISTRATION LIGHT FUSION 3 *OPTIONAL*	1

No.	Part No	Description	Qty

Decals 1 (819)

Rotating Elements

(CST00014)

Hands Rotating rollers

(CST00017)

Hands Crush area

(CST00019)

Check wheel nuts

(CST00020)

Lift hook Lifting eye

(CST00032)

Grease daily

(CST00060)

High Pressure

(CST00056)

Do not stand on platform

(CST00107)

Keep clear of pick-up

(CST00108)

Read manual before use

(CST00110)

Pressurised hydraulic oil

(CST00111)

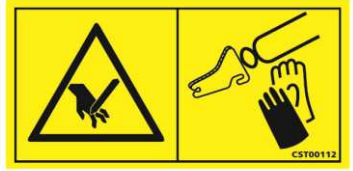

Warning sharp knives

(CST00112)

Remove key from ignition

(CST00113)

Close all covers

(CST00114)

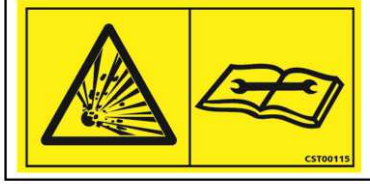

Release pressure

(CST00115)

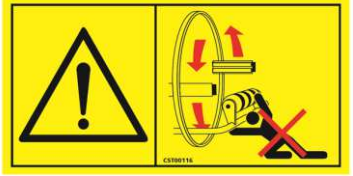

Keep clear of dispenser

(CST00116)

Max PTO & pressure

(CST00121)

General warnings

(CST00134)

No.	Part No	Description	Qty
1	CST00014	DECAL WARNING!ROTATING ELEMENT	2
2	CST00017	DECAL ROTATING ELEMENTs 214	3
3	CST00019	DECAL CRUSHED HAND	3
4	CST00020	DECAL CHECK WHEEL NUTS	2
5	CST00032	DECAL LIFTING HOOK	4
6	CST00060	DECAL GREASE GUN	12
7	CST00056	DECAL ACCUMULATOR WARNING	5
8	CST00107	DECAL NO STANDING ON PLATFORM	1
9	CST00108	DECAL ROTATING PICK UP REEL	3
10	CST00110	DECAL READ MANUAL	4
11	CST00111	DECAL HYDRAULIC WARNING	3
12	CST00112	DECAL WARNING!SHARP KNIVES	4
13	CST00113	DECAL REMOVE KEY	4
14	CST00114	DECAL CLOSE PROTECTIVE COVERS	3
15	CST00115	DECAL ACCUMULATOR PRESSURE	2
16	CST00116	DECAL DANGER ROTATING RING	3
17	CST00121	DECAL OIL PRESSURE/PTO RPM	1
18	CST00134	DECAL GENERIC WARNINGS	1

No.	Part No	Description	Qty

Decals 2 (834)

Free-flow tank return

(CST00006)

Dispenser film path

(CST00022)

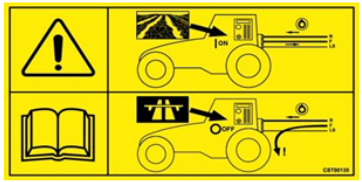

Hosing connections

(CST00135)

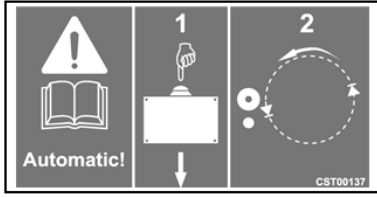

Dispenser switch

(CST00137)

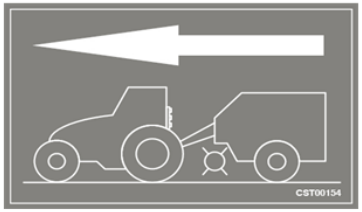

Dispenser orientation

(CST00154)

McHale logo

(CST00122)

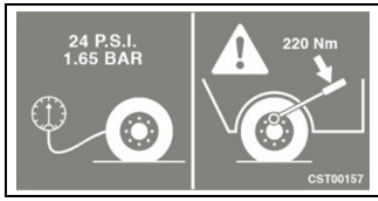

Wheel torque & pressure

(CST00157)

Danger idle roller RHS

(CST00161)

Danger idle roller LHS

(CST00162)

Keep brakes clean

(CST00163)

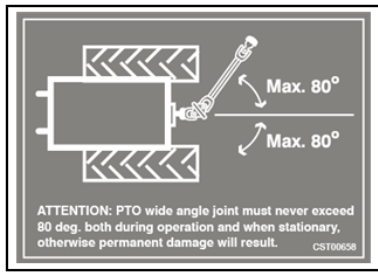

Max PTO angle

(CST00658)

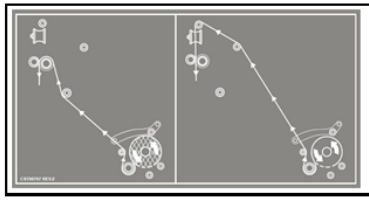

Net & NRF path routing

(CST00707)

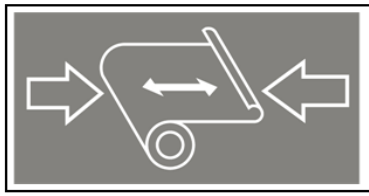

Net & NRF tension

(CST00735)

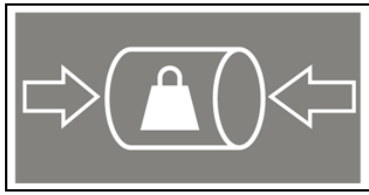

Bale density pressure

(CST00736)

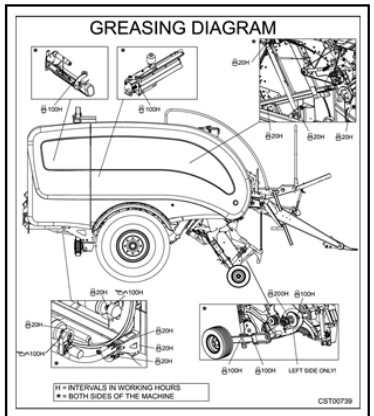

(CST00739)

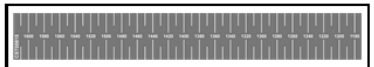

Net & NRF roll guides

(CST00815)

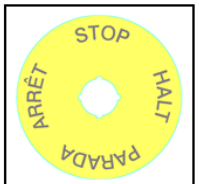

Stop machine

(CST00758)

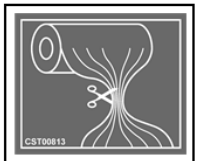

NRF blade

(CST00813)

No.	Part No	Description	Qty
1	CST00006	DECAL FREEFLOW RETURN TO TANK	1
2	CST00022	DECAL FILM PATH 998 MCH-014	1
3	CST00122	DECAL MCHALE REAR PANEL FUSION	1
4	CST00135	DECAL FUSION HOSING ROAD FIELD	1
5	CST00137	DECAL FUSION DISPENSER PARK	1
6	CST00154	DISPENSER RING ORIENTATION	2
7	CST00157	DECAL WHEEL PRESSURE TORQUE	2
8	CST00161	DECAL IDLE ROLLER DANGER RIGHT	1
9	CST00162	DECAL IDLE ROLLER DANGER LEFT	1
10	CST00163	DECAL WARNING KEEP BRAKES CLEAN	2
11	CST00658	DECAL PTO MAX OPERATING ANGLE	2
12	CST00707	DECAL NET & NRF PATH FUSION	2
13	CST00735	DECAL FILM-NET TENSION GAUGE	1
14	CST00736	DECAL CHAMBER PRESSURE GAUGE	1
15	CST00739	DECAL GREASING FUSION	1
16	CST00758	DECAL STOP MACHINE	1
17	CST00813	NRF BLADE DECAL	1
18	CST00815	NET AND NRF ROLL WIDTH MARKER	2

No.	Part No	Description	Qty

Decals 3 (821)

McHale RH rear **(CST00744)**

McHale RH middle **(CST00745)**

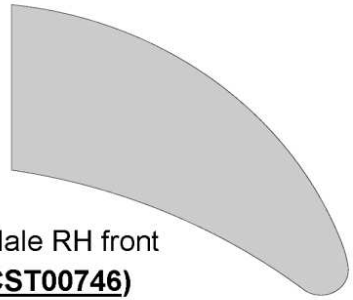

McHale RH front
(CST00746)

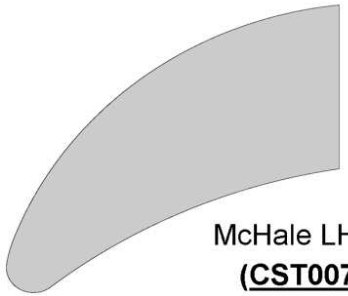

McHale LH front
(CST00749)

McHale LH middle **(CST00748)**

McHale LH rear **(CST00747)**

Knife lock position
Standard knives

(CST00118)

Model Series 610mm
(CST00750)

Model Series 440mm
(CST00751)

Knife lock position
German knives

(CST00606)

Hand crush panel RHS

(CST00753)

Hand crush panel LHS

(CST00754)

Chamber door lock

(CST00756)

No.	Part No	Description	Qty
1	CST00118	DECAL KNIFE LOCK POSITION	1
STANDARD KNIVES			
1	CST00606	DECAL GERMAN KNIFE LOCK	1
GERMAN KNIVES ONLY - UP TO SERIAL No 659804			
2	CST00744	STICKER 'MCHALE' RH REAR F3	1
3	CST00745	STICKER 'MCHALE' RH MIDDLE F3	1
4	CST00746	STICKER 'MCHALE' RH FRONT F3	1
5	CST00747	STICKER MCHALE LH REAR F3	1
6	CST00748	STICKER 'MCHALE' LH MIDDLE F3	1
7	CST00749	STICKER 'MCHALE' LH FRONT F3	1
8	CST00750	STICKER 'FUSION 3' 610MM WIDE	2
8a	CST00788	DECAL 'PLUS' FUSION 3 PLUS	2
USED UNDER FUSION 3 (ITEM 8) ON NRF BARREL WRAP MACHINES (SIDE PANELS) ONLY			
9	CST00751	STICKER 'FUSION 3' 440MM WIDE	1
9a	CST00794	DECAL 'PLUS' 280MM WIDE FUSION 3 PLUS	1
USED UNDER FUSION 3 (ITEM 9) ON NRF BARREL WRAP MACHINES (TOP DOOR) ONLY			
10	CST00753	DECAL HAND CRUSH FRONT PANEL RH	1
11	CST00754	DECAL HAND CRUSH FRONT PANEL LH	1
12	CST00756	DECAL DOOR LOCK VALVE FUSION	1

No.	Part No	Description	Qty